STABIFLEX

Natural frequency : (1)
6 to 11 Hz



DESCRIPTION

The STABIFLEX mount comprises a conical rubber section bonded between inner and outer metal parts.

- Steal Centre axis with threaded hole.
- Aluminium Square (four holes) or diamond base (two holes) with clearance hole.
- Bonded natural rubber, anti-slip bead.
- Cup to protect the rubber and distribute the load.

OPERATION

The design of the STABIFLEX mount gives the following basic characteristics :

- axial elasticity two or three times higher than radial elasticity;
- the rubber works in shear/compression;
- progressive buffer against shocks or accidental overload;
- anti-slip (may be placed directly on the ground).

Advantages

- The machine may be placed with its mounts directly on the ground.
- Speed of fixing.
- Easy movement of suspended machinery.
- Rubber protected against harmful liquids.
- Extensive range : 3 hardnesses of rubber for five existing types, allowing the mount to be optimised as a function of the load and exciting frequency.
- May be used with an anti-rebound washer.

Recommendations

- In order not to affect the performances of the mounting system, all external connections must be flexible.
- STABIFLEX mounts must be fitted so that the vibration input is in the axial direction.

1) the indicated natural frequency, are valid for the maxi loads of the ranges of use quoted in the paragraph : TECHNICAL CHARACTERISTICS.

DIMENSIONS

Section XX’

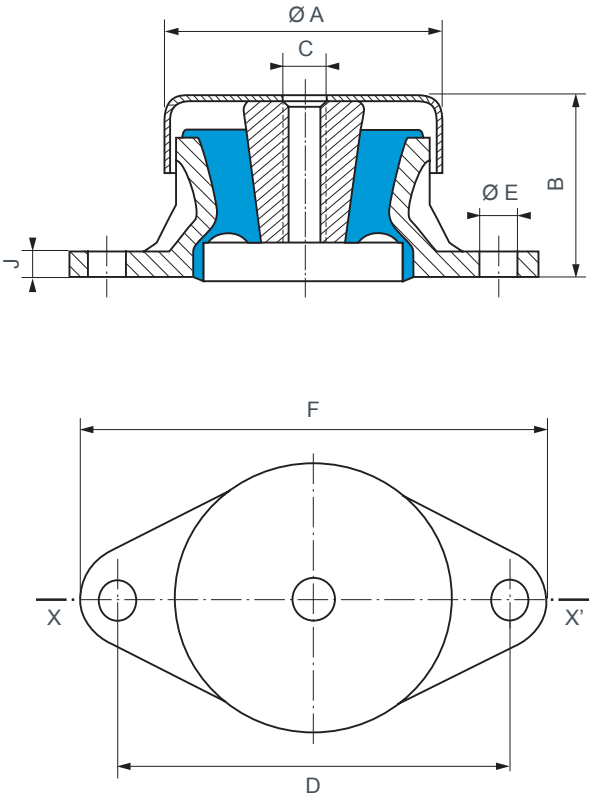

STABIFLEX - diamond base

Section XX’

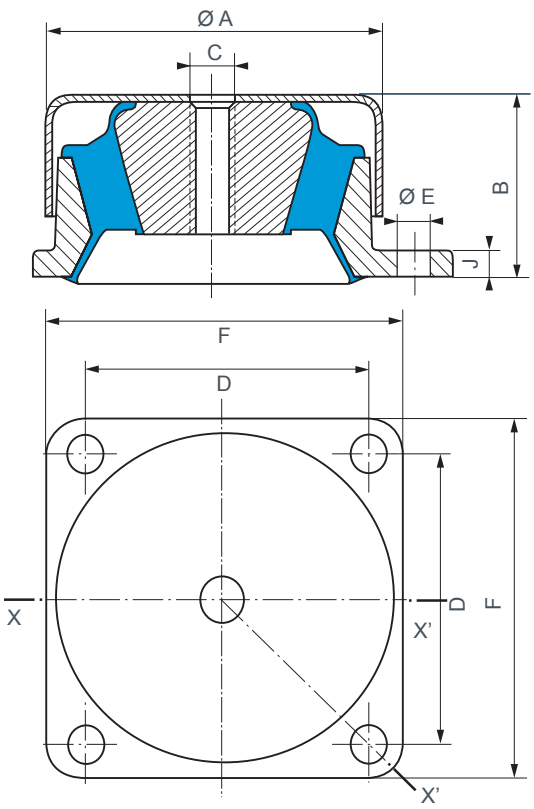

STABIFLEX - square base

Type	Reference	Hardness	Ø A (mm)	B (mm)	C	D (mm)	E (mm)	F (mm)	J (mm)	Weight (gr)
Diamond base	**530603** **530613**	45.60.75 45.60.75	69 84	41 51	M12 M12	98 115	9 11	114 137	6 7	250 450
Square base	**530622** **530642** **530652***	45.60.75 45.60 45.60.75	100 133 133	52 69 69	M12 M16 M16	90 114 114	11 13 13	114 144 144	7 9 9	1000 2300 2700

* Part identified by the letter “R” (reinforced)

See current price list for availability of items.

OPERATING CHARACTERISTICS

Nominal static load (daN)	Deflection (mm)	Reference	Hardness
10 - 42	3,5	**530603**	45
15 - 60	3	**530603**	60
20 - 93	3,5	**530613**	45
30 - 125	4	**530603**	75
40 - 165	3,5	**530613**	60
50 - 210	5	**530622**	45
65 - 260	3	**530613**	75

Nominal static load (daN)	Deflection (mm)	Reference	Hardness
65 - 275	4,5	**530622**	60
95 - 380	3,5	**530622**	75
110 - 450	8	**530642**	45
175 - 700	8	**530642**	60
250 - 1000	8	**530652**	45
325 - 1300	8	**530652**	60
450 - 1800	8	**530652**	75

LOAD/DEFLECTION CURVES IN AXIAL COMPRESSION

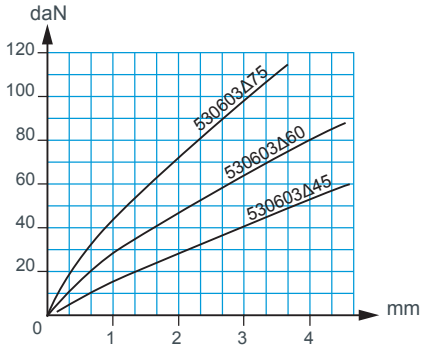

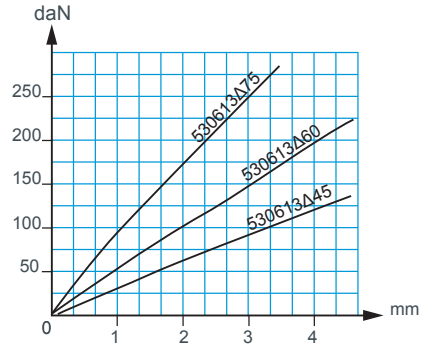

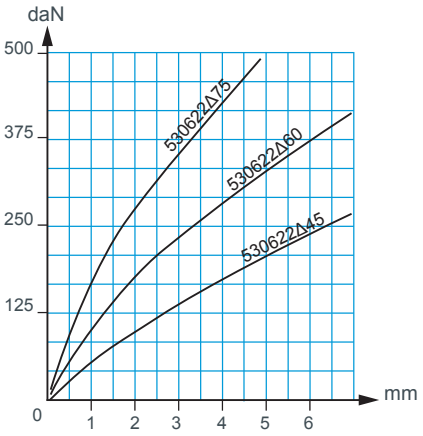

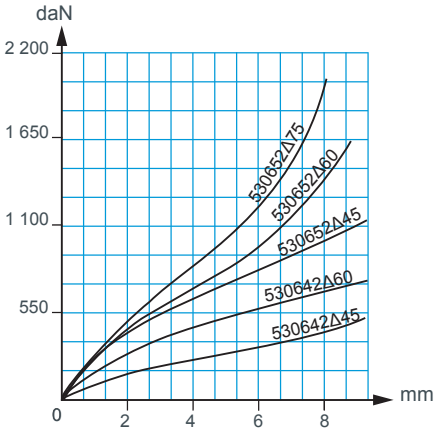

ASSEMBLY

Standard fixing methods

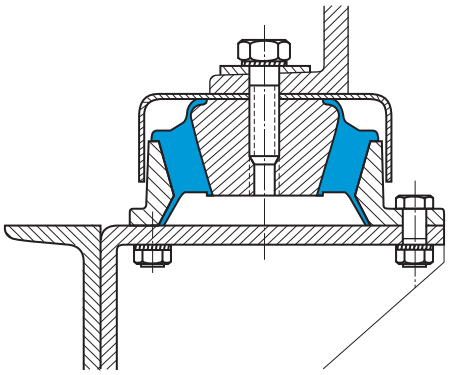

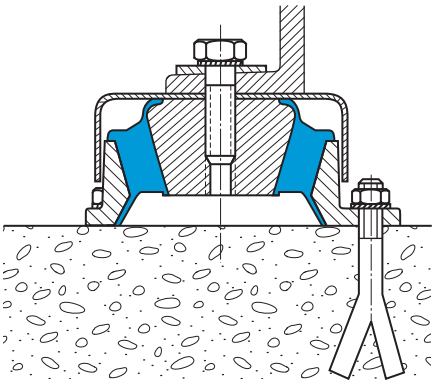

Fixing with anti-rebound washer (not included)

- The anti-rebound washer (not supplied, plan on demand) is fixed to the lower side of the centre axis.
- In this case, do not forget to fit a spacer.

Spacer thickness required for reference :
530603 h= 2 mm
530613 h= 4 mm
530622 h= 7 mm
530642 h= 14 mm
530652 h= 14 mm

