Product datasheet
Characteristics

XCKM521H29
limit switch XCKM - thermoplastic roller lever plunger - 1NC+1NO - slow - M20



Main

Range of product	OsiSense XC
Series name	Standard format
Product or component type	Limit switch
Device short name	XCKM
Body type	Fixed
Head type	Plunger head
Material	Metal
Body material	Zamak
Fixing mode	By the body
Movement of operating head	Linear
Type of operator	Spring return roller lever plunger thermoplastic
Type of approach	Lateral approach, 1 direction
Cable entry	3 entries tapped for M20 x 1.5 cable gland, cable outer diameter: 7…13 mm
Number of poles	2
Contacts type and composition	1 NC + 1 NO
Contact operation	Slow-break, break before make

Complementary

Switch actuation	By 30° cam
Electrical connection	Screw-clamp terminals, clamping capacity: 1 x 0.5...2 x 2.5 mm²
Contacts insulation form	Zb
Number of steps	1
Positive opening	With
Positive opening minimum force	24 N
Minimum force for tripping	8 N
Minimum actuation speed	6 m/min

Disclaimer: This documentation is not intended as a substitute for and is not to be used for determining suitability or reliability of these products for specific user applications

Maximum actuation speed	1.5 m/s
Contact code designation	A300, AC-15 (Ue = 240 V), Ie = 3 A conforming to EN/IEC 60947-5-1 appendix A Q300, DC-13 (Ue = 250 V), Ie = 0.27 A conforming to EN/IEC 60947-5-1 appendix A
[Ithe] conventional enclosed thermal current	10 A AC
[Ui] rated insulation voltage	300 V conforming to UL 508 500 V (pollution degree 3) conforming to IEC 60947-1 300 V conforming to CSA C22.2 No 14
Maximum resistance across terminals	25 MOhm conforming to IEC 60255-7 category 3
[Uimp] rated impulse withstand voltage	6 kV IEC 60664 6 kV IEC 60947-1
Short-circuit protection	10 A cartridge fuse, type gG
Electrical durability	5000000 cycles, DC-13, inductive load type, 120 V, 4 W, operating rate <60 cyc/mn, load factor: 0.5 conforming to IEC 60947-5-1 appendix C 5000000 cycles, DC-13, inductive load type, 24 V, 7 W, operating rate <60 cyc/mn, load factor: 0.5 conforming to IEC 60947-5-1 appendix C 5000000 cycles, DC-13, inductive load type, 48 V, 10 W, operating rate <60 cyc/mn, load factor: 0.5 conforming to IEC 60947-5-1 appendix C
Mechanical durability	20000000 cycles
Width	64 mm
Height	64 mm
Depth	30 mm
Net weight	0.3 kg
Terminals description ISO n°1	(21-22)NC (13-14)NO

Environment

Shock resistance	50 gn for 11 ms conforming to EN/IEC 60068-2-27
Vibration resistance	25 gn (f= 10…500 Hz) conforming to EN/IEC 60068-2-6
IP degree of protection	IP66 conforming to EN/IEC 60529
IK degree of protection	IK05 conforming to EN 50102
Electrical shock protection class	Class I conforming to IEC 61140 Class I conforming to NF C 20-030
Ambient air temperature for operation	-25…70 °C
Ambient air temperature for storage	-40…70 °C
Protective treatment	TC
Product certifications	CSA UL CCC
Standards	IEC 60947-5-1 EN 60947-5-1 EN 60204-1 CSA C22.2 No 14 IEC 60204-1 UL 508

Packing Units

Package 1 Weight	310 g
Package 2 Weight	10.383 kg

Offer Sustainability

Sustainable offer status	Green Premium product
EU RoHS Directive	Pro-active compliance (Product out of EU RoHS legal scope) EU RoHS Declaration
Mercury free	Yes
RoHS exemption information	Yes
Environmental Disclosure	Product Environmental Profile

Contractual warranty

Warranty	18 months

XCKM521H29

Dimensions

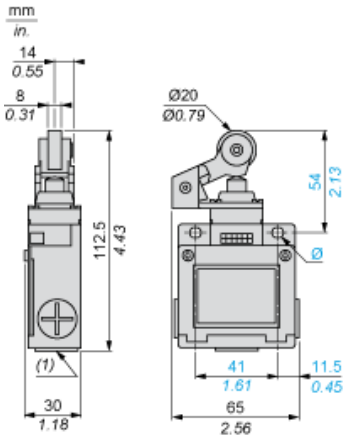

(1) 3 tapped entries M20 x 1.5
Ø : 2 elongated holes Ø 5.2 x 6.2

Mounting with Cable Entry

Position of Cable Gland

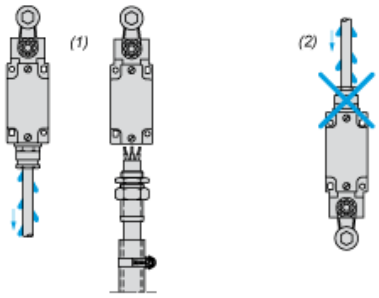

(1) Recommended
(2) To be avoided

Wiring Diagram

2-pole N/C + N/O Break before Make, Slow Break



Characteristics of Actuation

Switch Actuation by 30° Cam

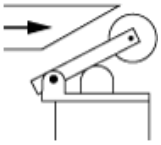

Functionnal Diagram

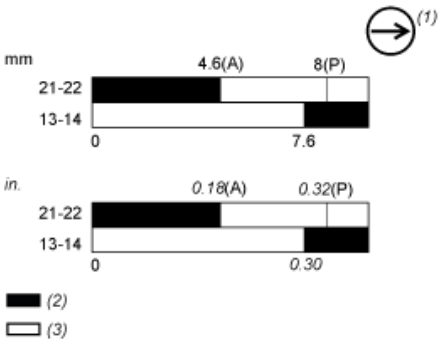

(P) Positive opening point
(A) Cam displacement
(1) NC contact with positive opening operation
(2) Closed
(3) Open