EVM005

Connecting cable with socket

ADOAH040VAS0005H04

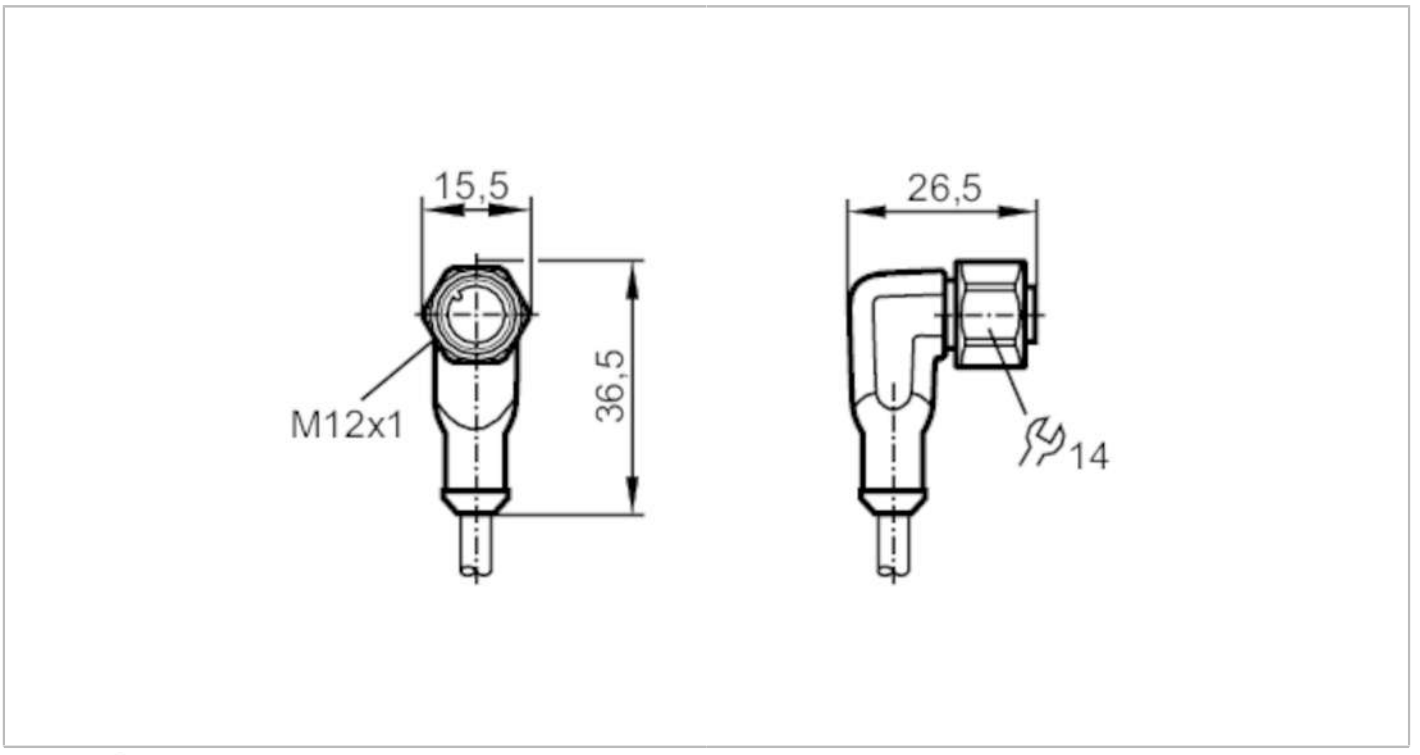

Application		
Special feature		Free from silicone; Halogen-free; Gold-plated contacts; Drag chain suitability
Application		applications in particularly harsh environments
Free from silicone		yes
Electrical data		
Operating voltage	[V]	< 250 AC / < 300 DC
Protection class		II
Max. current load total	[A]	4
Operating conditions		
Ambient temperature	[°C]	-40...90
Note on ambient temperature		cULus: ...75
Ambient temperature (moving)	[°C]	-25...90
Note on ambient temperature (moving)		cULus: ...75
Storage temperature	[°C]	-25...55
Storage humidity	[%]	10...100
Other climatic conditions for storage according to stated class		1K22/ DIN 60721-3-1
Protection		IP 65; IP 67; IP 68; IP 69K
Tests / approvals		
Vibration resistance	EN 60068-2-6 Fc	20 g (10...3000 Hz) / -20 °C / 50 °C
		50 sweep cycles, 1 octave per minute, in 3 axes

EVM005

Connecting cable with socket

ADOAH040VAS0005H04

Shock resistance		EN 60068-2-27 Ea	100 g 11 ms half sine; 6 shocks each in every direction along the three coordinate axes / -40 °C / 85 °C
Continuous shock resistance		EN 60068-2-29 Eb	40 g 6 ms; 4000 shocks each in every direction of the 3 coordinate axes / -20 °C / 50 °C
Fast temperature change		EN 60068-2-14 Na	TA = -40°C; TB = 85°C; t1 = 30 min; t2 = < 10 s 50 cycles
Salt spray test		EN 60068-2-52 Kb	severity level 5 (4 test cycles)
Mechanical data			
Weight	[g]	178.8	
Dimensions	[mm]	26.5 x 15.5 x 36.5	
Materials		housing: TPU orange; Sealing: FKM	
Material nut		stainless steel (1.4404 / 316L)	
Drag chain suitability		yes	
Drag chain suitability		bending radius for flexible use	min. 10 x cable diameter
		travel speed	max. 3.3 m/s for a horizontal travel length of 5 m and max. acceleration of 5 m/s²
		bending cycles	> 5 Mio.
		torsional strain	± 180 °/m
Remarks			
Pack quantity		1 pcs.	

Electrical connection

Cable: 5 m, PUR, Halogen-free, black, Ø 4.9 mm; 4 x 0.34 mm² (42 x Ø 0.1 mm)

Electrical connection - socket

Connector: 1 x M12, angled; coding: A; Locking: stainless steel (1.4404 / 316L); Contacts: gold-plated; Tightening torque: 0.6...1.5 Nm

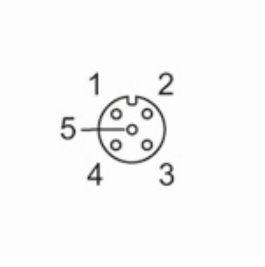

EVM005

Connecting cable with socket

ADOAH040VAS0005H04

Connection

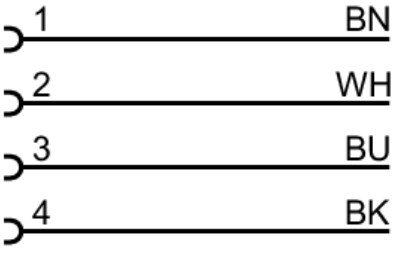

	Core colours :
BK =	black
BN =	brown
BU =	blue
WH =	white

Diagrams and graphs

characteristic line for derating

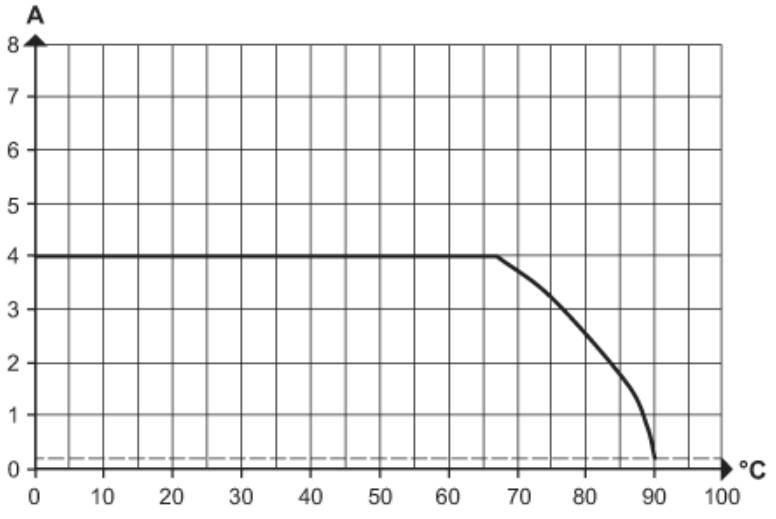

Derating Imax * 0.8 (DIN EN 60512-5-2)

X Ambient temperature [°C]

Y Current [A]