Air preparation unit, 2-part, Series AS2-ACD

R412006307

AVENTICS Series AS2 Air Preparation Units

The AVENTICS Series AS2 is a modular, versatile maintenance unit for universal application. This Series offers compact dimensions, is highly efficient, lightweight and easy-to-use. The AVENTICS Series AS guarantees reliability, safety, and efficiency with a simplified assembly and maintenance efforts.



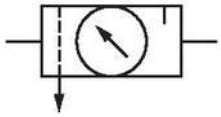

Technical data

Industry	Industrial
Parts	Air preparation units
Components	Filter pressure regulator Lubricator
Reservoir	reservoir, polycarbonate, with PA protective guard
Port	G 3/8
Nominal flow Qn	2000 l/min
Filter porosity	5 µm
Condensate drain	semi-automatic, open without pressure
Pressure gauge	with pressure gauge
Min. working pressure	1.5 bar
Max. working pressure	16 bar
Min. ambient temperature	-10 °C
Max. ambient temperature	50 °C
Min. regulation range	0.5 bar
Max. regulation range	8 bar
Lock type	for padlocks
Type	2-part
Type	Can be assembled into blocks

Air preparation unit, 2-part, Series AS2-ACD

R412006307

Pressure supply	single
Mounting orientation	vertical
Regulator type	Diaphragm-type pressure regulator
Regulator function	with relieving air exhaust
Filter element	exchangeable
Filter reservoir volume	28 cm³
Max. achievable compressed air class acc. to ISO 8573-1:2010	6 : 7 : -
Lubricator reservoir volume	40 cm³
Type of filling	Manual oil filling Semi-automatic oil filling during operation
Medium	Compressed air Neutral gases
Weight	0.633 kg

Material

Housing material	Polyamide
Seal material	Acrylonitrile butadiene rubber
Material front plate	Acrylonitrile butadiene styrene
Material threaded bushing	Die cast zinc
Material reservoir	Polycarbonate
Material protective guard	Polyamide
Material filter insert	Polyethylene
Part No.	R412006307

Technical information

The pressure dew point must be at least 15 °C less than ambient and medium temperature and may not exceed 3 °C.

Note: Polycarbonate reservoirs are susceptible to solvents, supplementary information can be found at "Customer information".

Nominal flow Qn with secondary pressure p2 = 6 bar at Δp = 1 bar

A change in the flow direction (from air supply on the left to air supply on the right) occurs by rotating installation by 180° about the vertical axis. Please see the operating instructions for further details.

Also suitable for separation of fluid oil or water due to the design.

Dimensions in mm

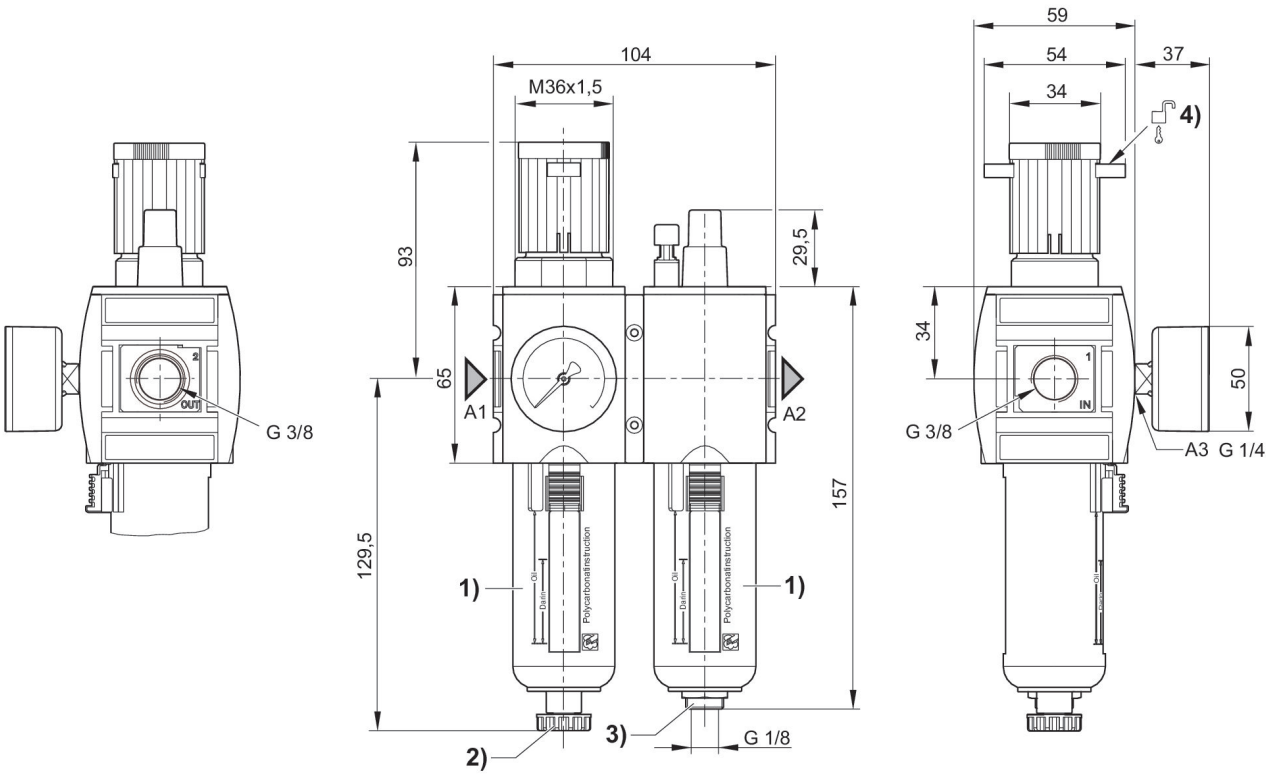

A1 = input
A2 = output
A3 = pressure gauge connection
1) Plastic reservoir and protective guard with window
2) Semi-automatic condensate drain
3) Port for semi-automatic oil filling
4) Mounting option for padlocks, max. shackle Ø 8

Lubricator activation margin

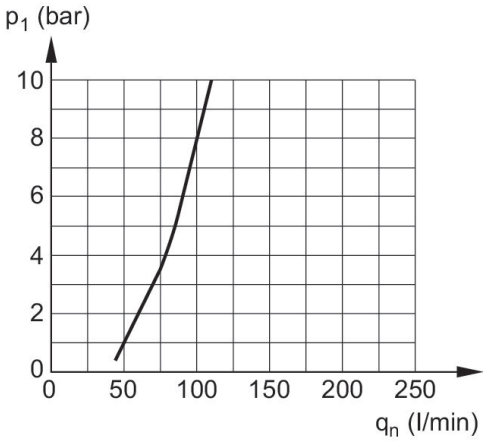

p1 = Working pressure
qn = Nominal flow

Flow rate characteristic (p2: 0,5 - 8 bar)

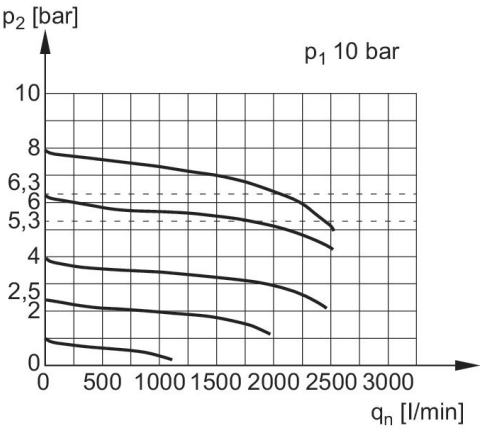

p1 = Working pressure
p2 = Secondary pressure
qn = Nominal flow

Air preparation unit, 2-part, Series AS2-ACD

R412006307

Accessories overview

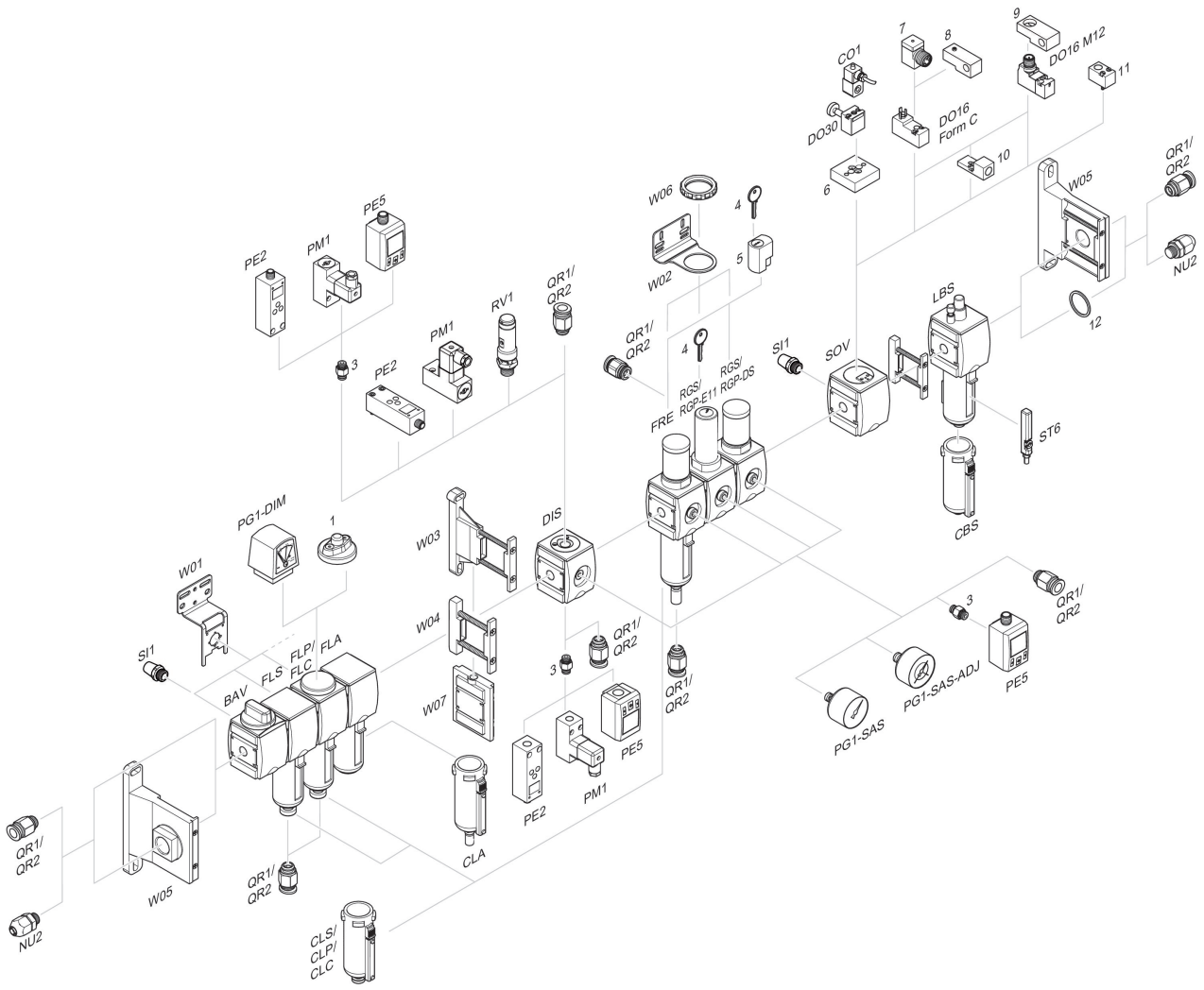

1 = contamination display 3 = Double nipple 4 = Key for E11 locking 5 = mortise lock 6 = Transition plate DO30 7 = Adapter, Series CON-VP 8 = Mounting aid DO16, form C 9 = Mounting aid DO16, M12 10 = Adapter for external pilot air 11 = Adapter pneumatic operation 12 = Sealing ring