REVISION HISTORY			
REV	DATE	BY	DESCRIPTION
H	29JUN2016	JPK/BGL	PRN: P2016-1435

M4 X 0.7 X 9.5 [.37] DEEP 2 PLACES.
Ø5 [Ø.196] MOUNTING HOLES IN PANEL.

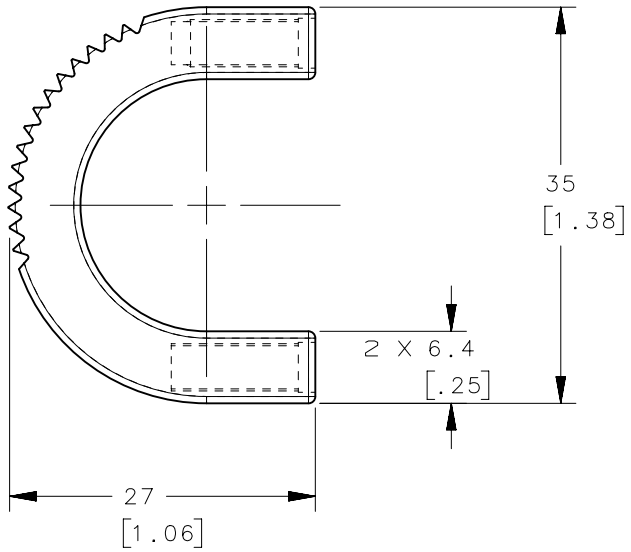

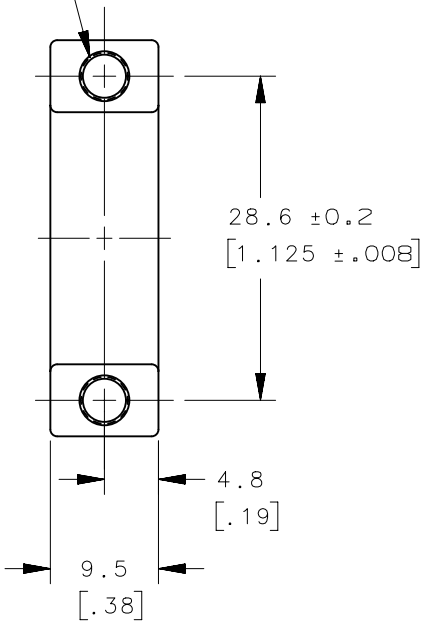

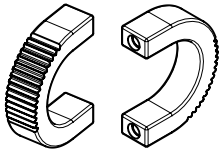

SCALE 1:2

PART NUMBER	MATERIAL	FINISH
B4-50-103-11	6063 ALUMINUM	CLEAR ANODIZED
B4-50-103-12	6063 ALUMINUM	BLACK POWDER COATED
B4-50-103-13	6063 ALUMINUM	NATURAL
B4-50-103-15	6063 ALUMINUM	BLACK ANODIZE
B4-50-103-75	6063 ALUMINUM	SILVER POWDER COATED

NOTES:

A. COSMETIC SPECIFICATION:
ALL SURFACES UNLESS OTHERWISE NOTED ARE TO CONFORM TO A CLASS "B" DESIGNATION AS DESCRIBED IN SOUTHCO COSMETIC SPECIFICATION:
S-121-03 FOR POWDER COATING
S-121-06 FOR ANODIZED FINISH

B. RoHS COMPLIANT.

THIRD ANGLE PROJECTION

MILLIMETERS [IN]

TOLERANCES UNLESS OTHERWISE NOTED

ALL DIMENSIONS WITHOUT TOLERANCES ARE FOR REFERENCE ONLY.

PER ASME Y14.5M-1994

PROPRIETARY ITEM
EXCEPT FOR USES EXPRESSLY GRANTED IN WRITING, INFORMATION DISCLOSED HEREON IS CONFIDENTIAL AND ALL RIGHTS, PATENT AND OTHERWISE, ARE RESERVED BY SOUTHCO, INC.

southco®
CONNECT·CREATE·INNOVATE

DESCRIPTION
SOUTHCO NO.4 PULL, 100 SERIES METRIC THREAD

SIZE	SYSTEM	DWG NO.
A4	NX	J-B4-50-103

DRAWN BY	DATE	SCALE	SHEET
VBS	13APR1984	1.5:1	1 OF 1