Model 3073
BNC (Female to Multi-Stacking Banana Plugs

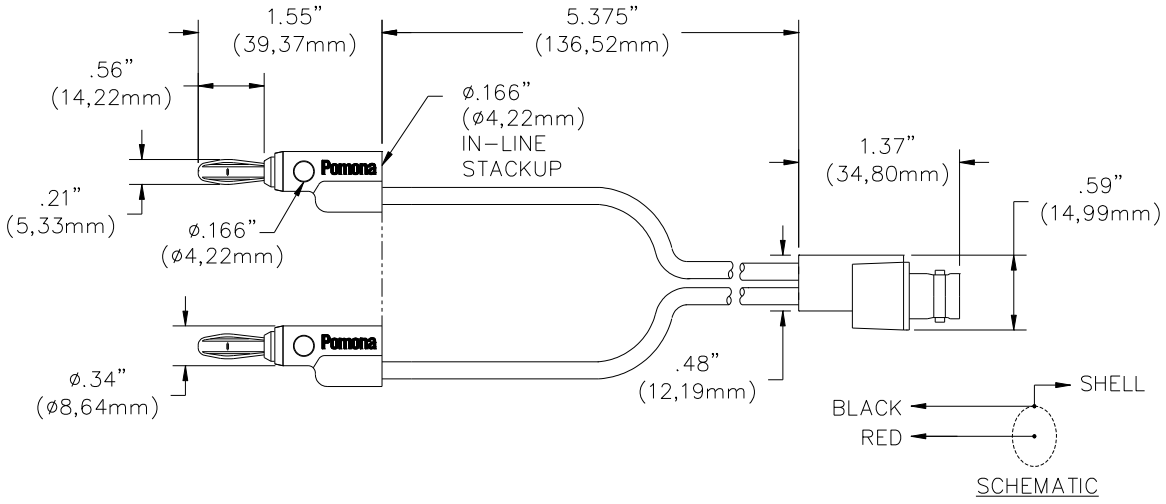

FEATURES:

- Converts BNC cables with male plugs to stackable banana plugs for versatility
- BNC connector and banana plugs are molded directly to the wire for pull strength durability and dust and moisture resistance
- BNC center contact is gold plated Beryllium Copper for corrosion resistance, low contact resistance and long insertion life

MATERIALS:

BNC: Nickel plated brass
Center Contact: Gold plated Beryllium Copper
Wire: 18 AWG, PVC
Marking: "Pomona 3073"
Banana Plugs: Nickel plated brass
Spring: Nickel plated Beryllium Copper
Insulation: Polypropylene, red and black

RATINGS:

Operating Voltage: Hand-held testing: 30VAC/60VDC Max.
Hands free testing in controlled voltage environments: 500 WVDC Max.

Operating Temperature: +55°C (+131°F) Max.

ORDERING INFORMATION: Model 3073

Custom lengths are available, contact Pomona Technical support: 800-241-2060 (Technicalsupport@pomonatest.com)

All dimensions are in inches. Tolerances (except noted): .xx = ±.02" (,51 mm), .xxx = ± .005" (,127 mm).
All specifications are to the latest revisions. Specifications are subject to change without notice.
Registered trademarks are the property of their respective companies.