10400 series

Professional pushbutton switches • threaded bushing Ø 10 mm



DISTINCTIVE FEATURES

Threaded bushing dia. 10 (.393)
CECC approved
Available with black finish



ELECTRICAL SPECIFICATIONS

- Max. current/voltage rating with resistive load : 3 A 24 VDC
- Minimum load : 100 µA 10 mV
- Initial contact resistance : 10 mΩ max.
- Insulation resistance : 1,000 MΩ min. at 5 00VDC
- Dielectric strength :
  1,000 Veff. 50 Hz min. between terminals of the same pole
  2,000 Veff. 50 Hz min. between terminals and frame
  2,000 Veff. 50 Hz min. between terminals of adjacent poles
- Electrical life : 50,000 cycles

GENERAL SPECIFICATIONS

- Torque : 1.50 Nm (1.106 Ft.lb) max. applied to nut
- Operating temperature : -40 °C to +85 °C (-40 °F to +185 °F)
- Max. panel thickness : 3.5 mm (.138)

MATERIALS

- Case : diallylphthalate (DAP)
- Actuator : brass, chrome plated
- Bushing : brass, nickel plated
- Housing : brass, nickel plated
- Contacts :
  - silver
  - gold plated silver
- Terminal seal : epoxy

APEM products may be recycled at end-of-life for the re-claiming of valuable metal components.

The company reserves the right to change specifications without notice.

10400 series

Professional pushbutton switches • threaded bushing Ø 10 mm

AGENCY APPROVAL

CECC 96401-001

Availability : consult factory for details of approved models.
Marking : to order switches marked CECC, add “CECC” to model number.

PANEL CUT-OUT

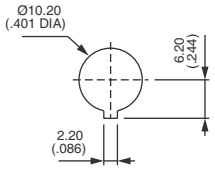

TERMINALS

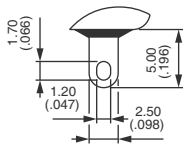

ELECTRICAL FUNCTIONS

→ KEYWAY

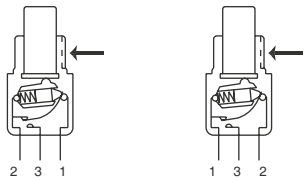

Single pole | Double pole

ABOUT THIS SERIES

Complete part numbers are shown on the following page.

Sealing boots are available to protect the switches against dust and water. See “Sealing boots“ section of website.

Mounting accessories : standard hardware supplied with all models : 1 knurled nut, 1 hex nut, 1 locking ring and 1 lockwasher. It is presented in the “Hardware“ section of website.

10400 series

Professional pushbutton switches • threaded bushing Ø 10 mm

SOLDER LUG TERMINALS - SINGLE POLE



	A 1-2	B 1-3
Silver contacts		
104350003	ON	MOM
Gold plated silver contacts		
104350108	ON	MOM

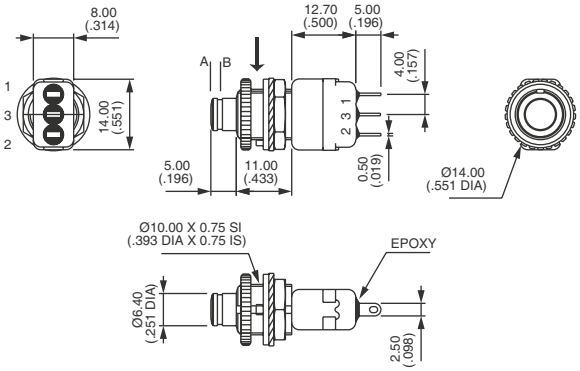

SOLDER LUG TERMINALS - DOUBLE POLE



	A 1-2 5-4	B 1-3 5-6
Silver contacts		
104450003	ON	MOM
Gold plated silver contacts		
104450108	ON	MOM

Matt black finish : part numbers on request.

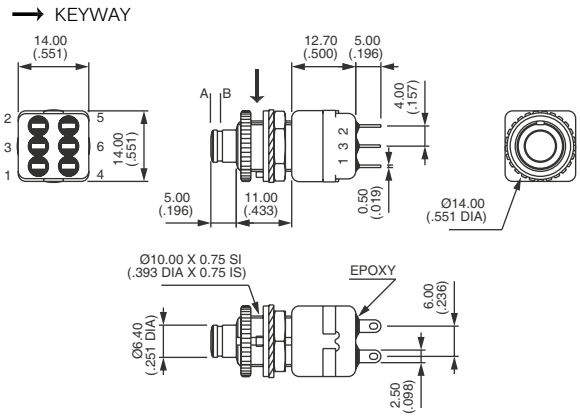

AGENCY APPROVAL

BASIC P/N .....

CECC CECC 96401-001
Blank No agency approval required.

Availability : consult factory for details of approved models.
Marking : to order switches marked CECC, please complete above box with CECC.

CAPS

Order separately.

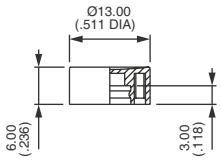

U2600

For cap colors, replace last "0" by number :

1	Blue	6	Red
1/4	Dark blue	7	Ivory
2	Black	7/1	White
3	Green	9	Orange
4	Grey		
5	Yellow		