Brand of NTN corporation

Technical data



6212EE

Single row deep groove ball bearings

Deep groove ball bearing, radial contact, pressed steel cage, contact seals on both sides

VISUAL (S)

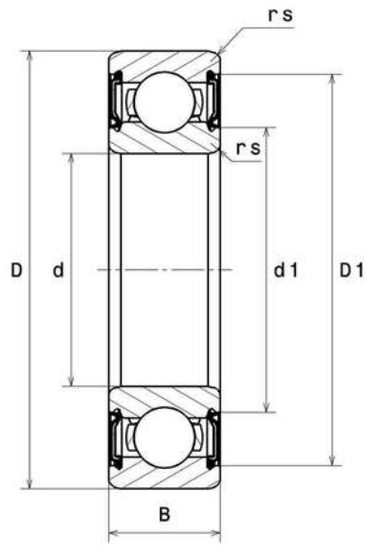

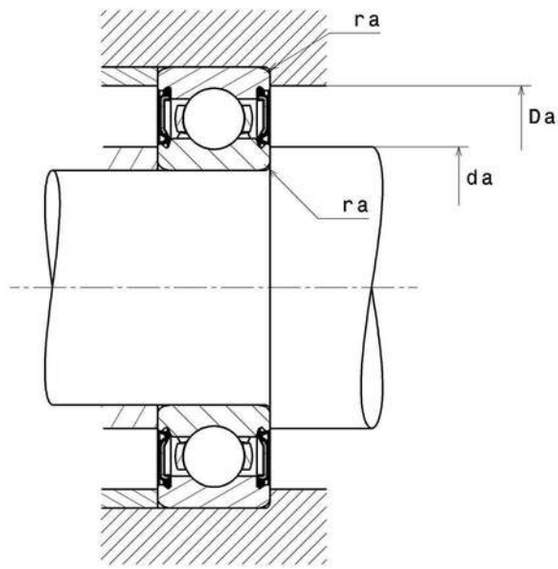

NTN Europe
1 rue des Usines · BP 2017 · 74010 Annecy Cedex · France · Tel. +33 (0)4 50 65 30 00
S.A. au capital de 322 639 919 € · RCS ANNECY B 325 821 072 · Id. Fiscale : FR 48 325 821 072
SIRET 325 821 072 00015 · Code APE 2815 Z · Code NACE 28.15

6212EE
Single row deep groove ball bearings

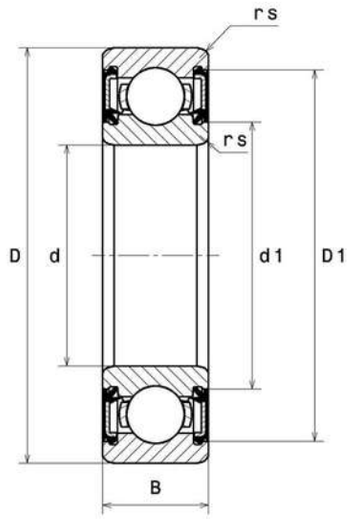

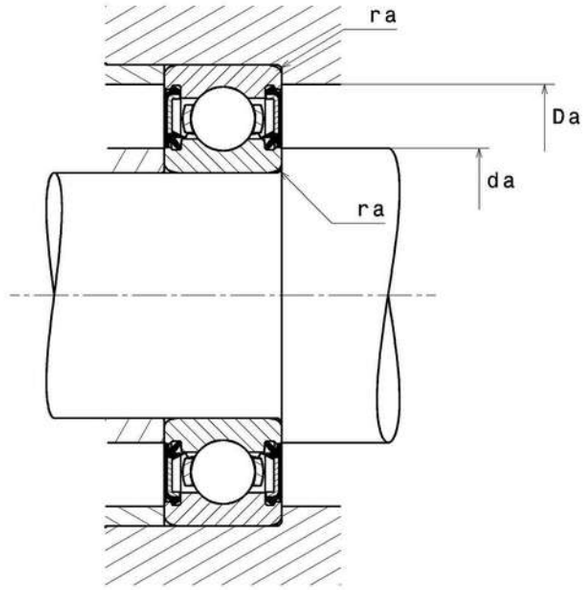

6212EE
Single row deep groove ball bearings

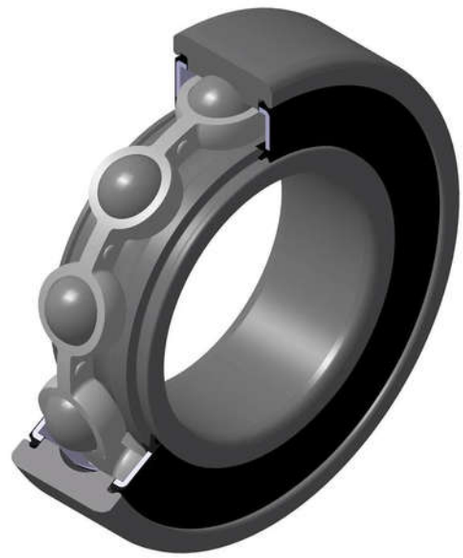

PRODUCT DEFINITION	
Brand	SNR
d - Internal diameter	60 mm
D - External diameter	110 mm
B - Bearing/Inner ring width	22 mm
d1 - External diameter inner ring	73,2 mm
D1 - Inner diameter outer ring	97,6 mm
rs - Min fillet radius	1,5 mm
Radial clearance class	CN
Mass	0,78 kg

PRODUCT PERFORMANCE	
C - Dynamic load	55,3 kN
C0 - Static load	36 kN
Cu - Fatigue limit load	1,64 kN

PRODUCT PERFORMANCE	
f0 - Coefficient	14.3
Nlim - Mechanical Limit Speed	3900 tr/min
Tmin - Min operating temperature	-30 °C
Tmax - Max operating temperature	120 °C

BEARING FREQUENCIES	
BPFO - Characteristic outer ring frequency (60 rpm)	4.066 Hz
BPFI - Characteristic inner ring frequency (60 rpm)	5.934 Hz
FTF - Characteristic cage frequency (60 rpm)	0.407 Hz
BSF - Characteristic rolling element frequency (60 rpm)	5.168 Hz

ABUTMENT	
da min - Min shoulder diameter IR	68 mm
da max - Max shoulder diameter IR	73,2 mm
Da max - Max shoulder diameter OR	102 mm
ra max - Max shaft & housing fillet radius	1,5 mm

INDUSTRY CALCUL FACTORS

Equivalent dynamic radial load

P = X.Fr + Y.Fa

$\frac{f_0 F_a}{C_0}$	e	Fa / Fr ≤ e		Fa / Fr > e	
		X	Y	X	Y
0.172	0.19	1	0	0.56	2.3
0.345	0.22				1.99
0.689	0.26				1.71
1.03	0.28				1.55
1.38	0.3				1.45
2.07	0.34				1.31
3.45	0.38				1.15
5.17	0.42				1.04
6.89	0.44				1

Equivalent static radial load

Po = Xo.Fr + Yo.Fa

X_0	Y_0
0.6	0.5

For single or DT bearing arrangement :

If Po <Fr, then use Po = Fr