Storm

2200 Series
Panel-mount Trackballs

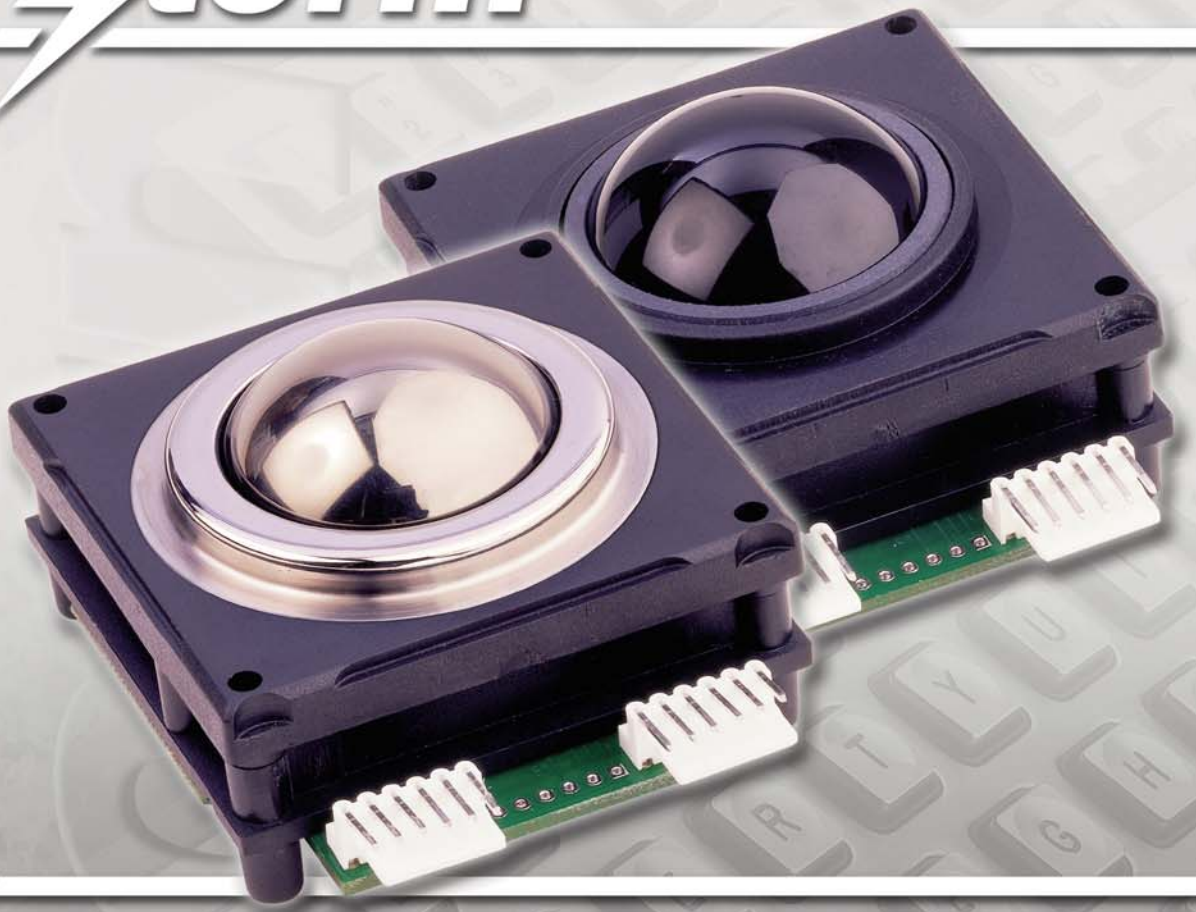

Rugged cursor control for industrial and hostile public environments

- 38mm panel-mount trackball provides smooth, responsive and precise cursor control
- Vandal resistant version features a stainless steel retention ring and a coated steel ball (mirror finish) (10J BS EN 60068-2-75: 1997)
- Robust version features a tough phenolic resin ball (black)
- Sealed against the ingress of liquids & dust to IP65 when ball is stationary (IP54 when rotating)
- Operating temp: -20°C (dry) to +60°C
- Robust chassis designed to provide secure under-panel fixing for maximum resistance to hard use, abuse and vandalism
- On-board encoder automatically configures to provide either USB or PS2 connectivity
- Two 'click keys' (not supplied) can be connected directly to the on-board encoder
- USB and PS2 cables for connection to host system are available separately



www.storm-interface.com

Storm Interface products include technology protected by international patents and design registration. All rights reserved.

Storm

Panel-mount trackballs for industrial and public environments



These 38mm trackballs provide smooth, accurate and responsive cursor control in wet, dirty or aggressive environments. Each device automatically configures to provide USB or PS2 connectivity. Two selector (click) buttons (not supplied) can be configured to provide either left and right click functions or for both buttons to provide left click functions only. These trackballs can be installed as a flush mounted component in a control panel or equipment housing. Cables enabling connection to either USB or PS2 systems are supplied separately. The trackballs are constructed to ensure maximum resistance to hard use, abuse, and vandalism.

Overall Dimensions

(Vandal plate not shown)

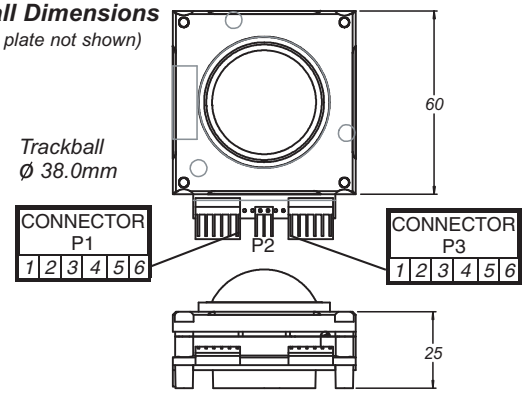

Panel Preparation Details

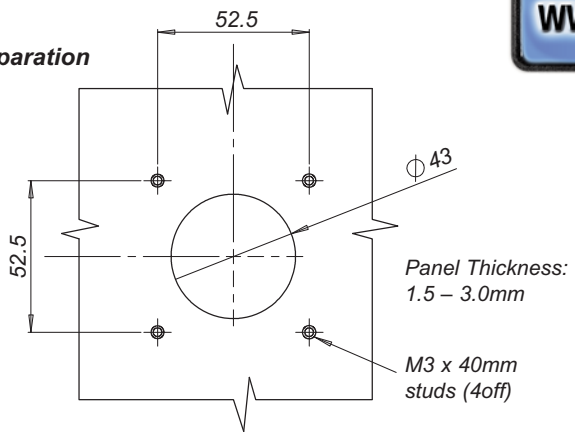

Connector Pinout Details

Pin	Button Connections (P1)	PS2 / USB Output Connections (P3)
1	0V	D- / Data
2	Button 1 (left)	D+ / Clock
3	0V	Test Only
4	Button 2 (right)	Power +5V
5	0V	Ground 0V
6	Button 3 (middle)	Not used

The unit automatically selects either USB or PS/2 protocols on power-up. No re-setting of any DIP switches required.

If both buttons are required to be set as left click then a connection must be made between pins on connector P2 using the jumper device (supplied).

Please note that the TEST input is reserved for factory test only. On no account should a connection be made to this terminal.

The Button inputs are pulled high to 5V within the unit.

Both rising and falling edges of this signal are debounced for 30ms.

The Storm Trackball is designed to work with resident drivers and does not require additional software to be loaded.

Electrical

Supply Voltage	**5.0V dc ±10%**
Switch Debounce	**30ms rising/falling**
Supply Current	**15mA maximum**
Resolution	**150 pulses, 600 counts/revolution**

Environmental

Operating Temp	**-20°C (dry) to +60°C**
IP65 seal when ball stationary	
IP54 seal when ball rotating	
Humidity	**95% Rh max, non-condensing**

Mechanical

Tracking Force	**50g nominal any direction**
Ball Speed	**250 rpm maximum**
Operational Life	**10 million revolutions (min)**
Mounting Angle	**within 45° from horizontal**

Material

Robust Trackball	**Phenolic Resin**
Vandal Resistant Trackball	**Surface Treated Steel**
Seal Material	**PTFE with low friction fill**
Vandal Plate	**Stainless Steel**

NB. Robust Version does not have Vandal Plate

Installation

Prepare plate with hole for ø43.0mm bezel and M3 x 40mm studs on 52.5mm centres.
Fit sealing gasket to trackball.
Place trackball over studs.
Place vandal plate over studs (VR version only).
Secure with plain washers and Nyloc nuts.
IMPORTANT: Max torque 40Ncm on nuts.
Connect switches to connector P1.
If reqd,fit jumper to enable both buttons as left click.

Accessories [x] denotes packaging variant

Stock No.	Item
2200-00200[x]	Cable 2.5m PS2
2200-00300[x]	Cable 2.5m USB
2200-00020[x]	Trackball Unit PS2 / USB Black Phenolic Ball
2200-00030[x]	Trackball Unit PS2 / USB Coated Steel Ball

Whilst every effort is made to ensure details are correct at time of print, specifications are subject to change without notice.

UL File reference: E230121

Designed & produced by **NIK Design** www.nikdesign.co.uk

2200-LIT-01 Rev 4
Nov 2008

FM 39602



Storm is a trademark of Keymat Technology Ltd
Storm Interface is a trading name of Keymat Technology Ltd

Storm Interface products include technology protected by international patents and design registration. All rights reserved.