V74G - EXCELON® Modular System
Pressure relief valves



- Port size: 3/8" ... 3/4" (ISO G/NPT)
- Excelon design allows in-line installation or modular installation with other Excelon products
- Push to lock adjusting knob with optional tamper resistant accessory
- Helps protect air operated equipment from over pressurisation
- Norgren pressure relief valves comply with category O(S.E.P.) and category 1 of the Pressure Equipment Directive 97/23/EC.

Technical features

Medium:
Compressed air only

Maximum operating pressure:
17 bar (246 psi)

Relief pressure range:
Standard
0,3 ... 10 bar (4 ... 145 psi)
Optional
0,3 ... 4 bar (4 ... 58 psi)
0,7 ... 17 bar (10 ... 250 psi)

Port size:
G3/8, G1/2, G3/4, 3/8 PTF, 1/2 PTF or 3/8 PTF

Gauge port:
Rc 1/8 with ISO G main ports
1/4 PTF with PTF main ports

Relief port:
Same size as the main ports

Ambient/Media temperature:
-34° ... +80°C (-30° ... +176°F)
Version with gauge:
-34° ... +65°C (-30° ... +149°F)
Air supply must be dry enough to avoid ice formation at temperatures below +2°C (+35°F).

Materials:
Body: Aluminium
Bonnet: Aluminium
Bottom plug: Acetal
Elastomers: CR

Technical data - standard models

Symbol	Port size	Size	Pressure range (bar)	Weight (kg)	Model
	G3/8	–	0,3 ... 10	0,82	V74G-3GK-NMN
	G1/2	Basic	0,3 ... 10	0,80	V74G-4GK-NMN
	G3/4	–	0,3 ... 10	0,78	V74G-6GK-NMN

Option selector

V74G-★★★-N★★

Port size	Substitute
3/8"	3
1/2"	4
3/4"	6
Thread form	**Substitute**
NPT	A
ISO G parallel (standard)	G
Adjustment	**Substitute**
Knob (standard)	K
T-bar	T*1)

*1) Units with 17 bar outlet pressure range are available only with the T-bar adjustment; therefore sub stitute T at the 7th position and S at the 9th position.

Gauge	Substitute
With	G
Without (standard)	N
Relief pressure adjustment range *2)	**Substitute**
0,3 ... 10 bar	M
0,3 ... 4 bar	F
0,7 ... 17 bar	S *1)

*1) Relief valve can be adjusted to pressures in excess of, and less than, those specified. Do not use these units to control pressures outside of the specified ranges.

Our policy is one of continued research and development. We therefore reserve the right to amend, without notice, the specifications given in this document. (1996 - 8062c) © 2024 Norgren GmbH.

Flow characteristics

Spring range: 0,3 ... 10 bar (4 ... 145 psi)
Port size: 1/2"

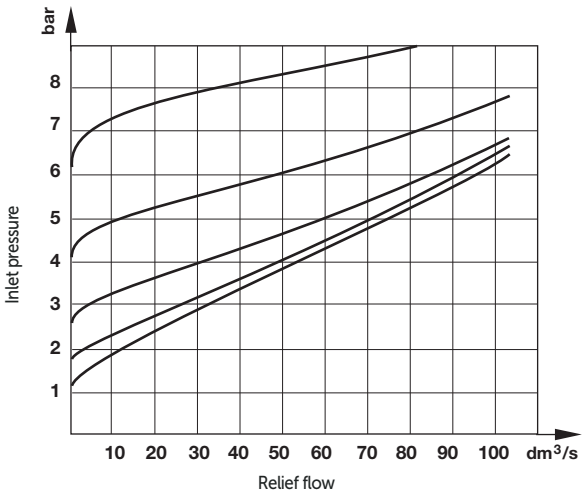

Accessories

Wall mounting bracket	Quikclamp®	Quikclamp with wall bracket®	Neck mounting bracket	Panel nut	Tamper resistant kit
					
Page 3	Page 3	Page 3	Page 3		
4324-50	4314-51	4314-52	4368-51	4348-89	4355-51

Quikmount pipe adaptor *1)	Porting block with three alternative 1/4" ports	2/2 Shut-off valves (for full technical specification see datasheet 8.200.600)	3/2 Shut-off valves (for full technical specification see datasheet 8.200.600)
			
Page 3	Page 3	Page 3	Page 3
G3/8: 4315-10	G1/4: 4316-52	G 3/8: T74B-3GA-P1N	G 3/8: T74T-3GA-P1N
G1/2: 4315-11	1/4 PTF: 4316-50	G 1/2: T74B-4GA-P1N	G 1/2: T74T-4GA-P1N
G3/4: 4315-12		G 3/4: T74B-6GA-P1N	G 3/4: T74T-6GA-P1N
3/8 PTF: 4315-02			
1/2 PTF: 4315-03			1/2 PTF: T74T-4AA-P1N
3/4 PTF: 4315-04		3/4 PTF: T74B-6AA-P1N	3/4 PTF: T74T-6AA-P1N

*1) Please use a Quikmount pipe adaptor if the Quikclamp be mounted at inlet or outlet side.

Pressure switch

Porting block for pressure switch	Pressure switch (0,5 ... 8 bar)
	
Page 4	
0523110000000000	0881300000000000

Padlock

Padlock (brass) with two keys *1)

0613633000000000

*1) For shut-off valves and tamper resistant kit

Service kits

Service kit

V74G-KIT

Our policy is one of continued research and development. We therefore reserve the right to amend, without notice, the specifications given in this document. (1996 - 8062c) © 2024 Norgren GmbH.

Drawings

Dimensions in mm
Projection/First angle

Standard

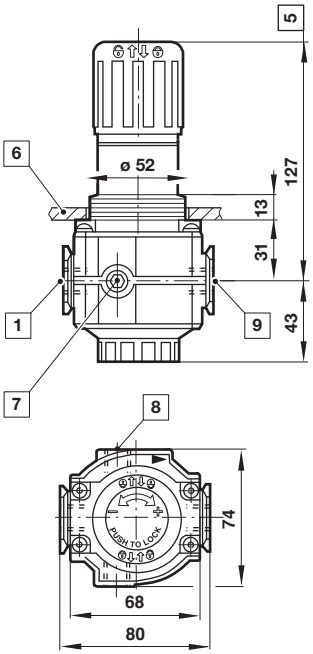

T-bar

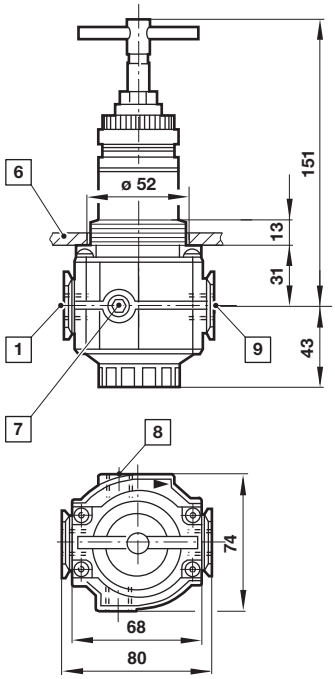

1 Inlet ports 3/8 ", 1/2" or 3/4"
5 Reduces by 4 mm with knob in locked position
6 Panel thickness 2 ... 6 mm
7 Gauge port Rc1/8 for ISO G and 1/4 PTF for PTF main ports
8 Alternative gauge port plugged
9 Exhaust ports 3/8 ", 1/2" or 3/4"

Accessories

Quikclamp®

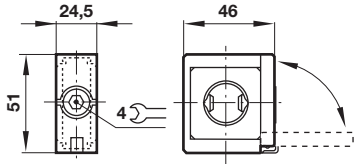

Quikclamp® with wall bracket

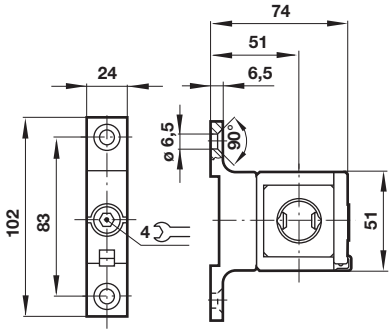

Porting block

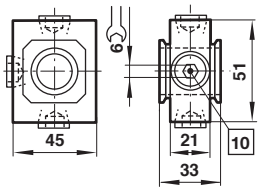

10 Ports 1/4" ISO G/PTF plugged

Pipe adapter

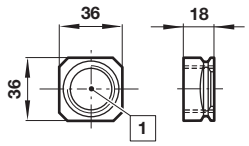

1 Main ports 3/8", 1/2" or 3/4" ISO G/PTF

Wall mounting bracket

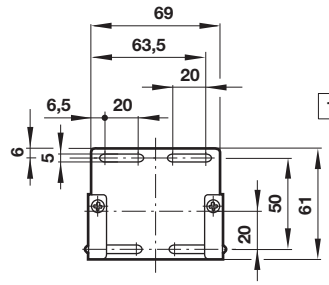

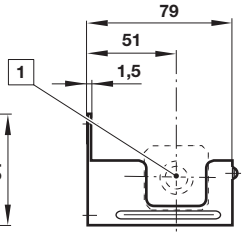

1 Main ports

Neck mounting bracket

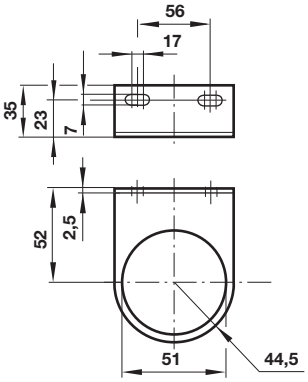

Shut-off valves

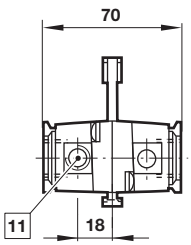

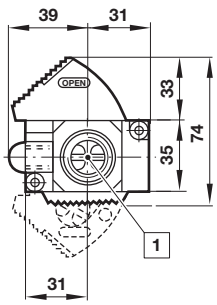

1 Main ports 3/8", 1/2" or 3/4" ISO G/PTF
11 Exhaust port Rc1/8 at 3/2 valve only

Our policy is one of continued research and development. We therefore reserve the right to amend, without notice, the specifications given in this document. (1996 - 8062c) © 2024 Norgren GmbH.

Porting block for pressure switch

Dimensions in mm
Projection/First angle

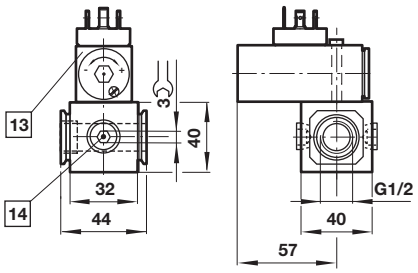

13 Pressure switch is not in scope of delivery
14 Alternative G1/4 ports plugged

Warning

These products are intended for use in industrial compressed air systems only. Do not use these products where pressures and temperatures can exceed those listed under **»Technical features/ data«**.
Before using these products with fluids other than those specified, for non-industrial applications, life-support systems or other applications not within published specifications,
consult Norgren Ltd.
Through misuse, age, or malfunction, components used in fluid power systems can fail in various modes.

The system designer is warned to consider the failure modes of all component parts used in fluid power systems and to provide adequate safeguards to prevent personal injury or damage to equipment in the event of such failure.
System designers must provide a warning to end users in the system instructional manual if protection against a failure mode cannot be adequately provided.
System designers and end users are cautioned to review specific warnings found in instruction sheets packed and shipped with these products.

Our policy is one of continued research and development. We therefore reserve the right to amend, without notice, the specifications given in this document. (1996 - 8062c) © 2024 Norgren GmbH.