EVC01E

PNP/NPN inverter module

Converter PNP-NPN

Please see the technical note under "Downloads"

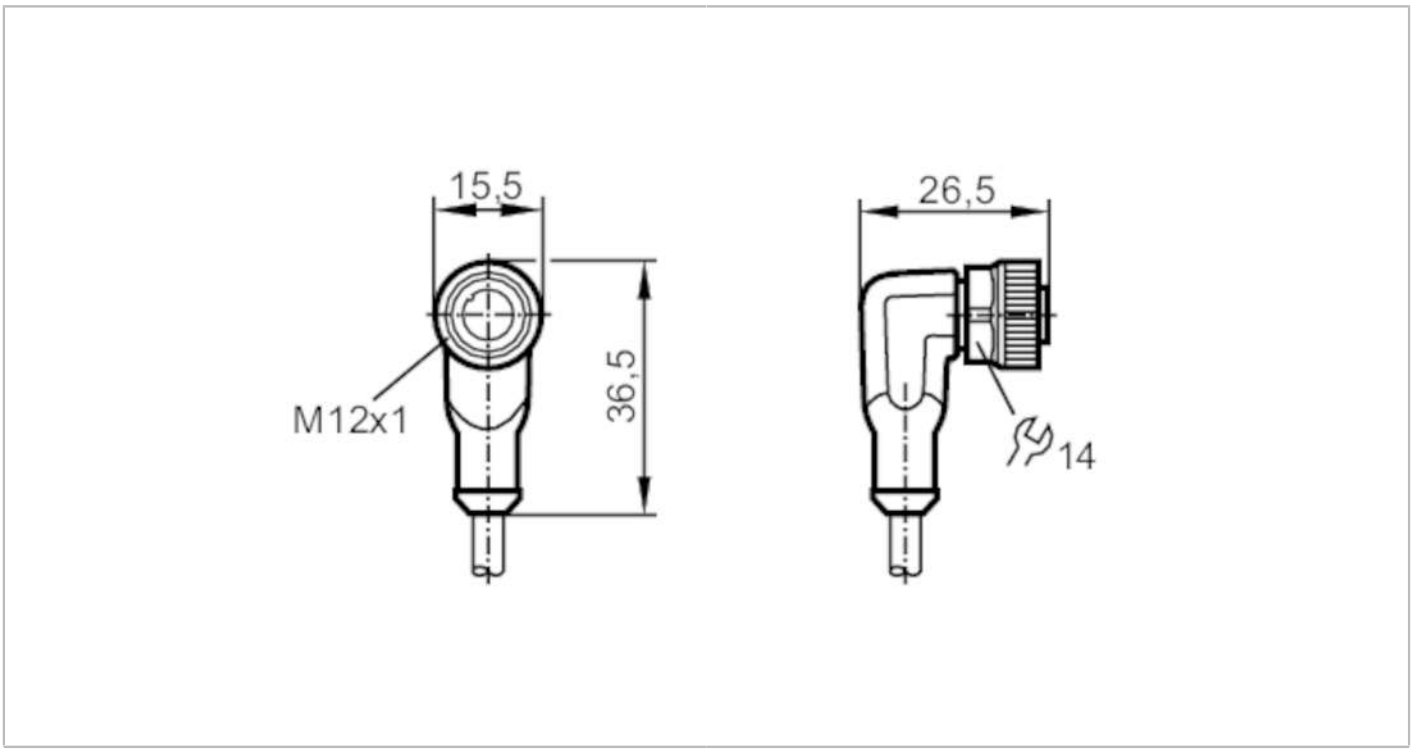

Application		
Special feature		Halogen-free; Gold-plated contacts; Drag chain suitability
Compatible with paint		yes
Electrical data		
Operating voltage tolerance	[%]	10
Operating voltage	[V]	< 24 DC
Protection class		II
Max. current load total	[A]	0.1
Outputs		
Max. voltage drop switching output DC	[V]	2
Operating conditions		
Ambient temperature	[°C]	-25...60
Ambient temperature (moving)	[°C]	-25...60
Protection		IP 65; IP 67; IP 68; IP 69K
Tests / approvals		
MTTF	[years]	17562
Mechanical data		
Weight	[g]	154.9
Dimensions	[mm]	26.5 x 15.5 x 36.5
Materials		housing: TPU black; Sealing: FKM

EVC01E

PNP/NPN inverter module

Converter PNP-NPN

Material nut	brass, nickel-plated	
Drag chain suitability	yes	
Drag chain suitability	bending radius for flexible use	min. 10 x cable diameter
	travel speed	max. 3.3 m/s for a horizontal travel length of 5 m and max. acceleration of 5 m/s²
	bending cycles	> 5 Mio.
	torsional strain	± 180 °/m

Remarks

Remarks	for sensors to IEC 60947-5-2 with normally open operation
Notes	Please see the technical note under "Downloads"
Pack quantity	1 pcs.

Electrical connection

Cable: 5 m, PUR, Halogen-free, black, Ø 4.3 mm; 4 x 0.34 mm² (42 x Ø 0.1 mm)

Electrical connection - socket

Connector: 1 x M12, angled; coding: A; Locking: brass, nickel-plated; Contacts: gold-plated; Tightening torque: 0.6...1.5 Nm

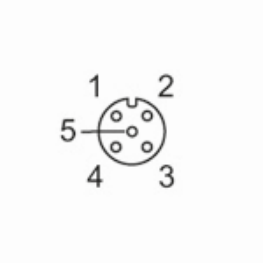

Connection

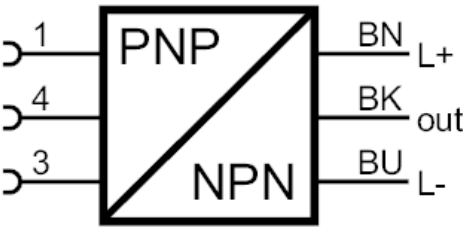

	Core colours :
BK =	black
BN =	brown
BU =	blue
WH =	white