FEMALE PLUG M8 90° ANGLED

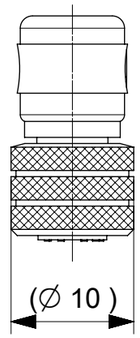

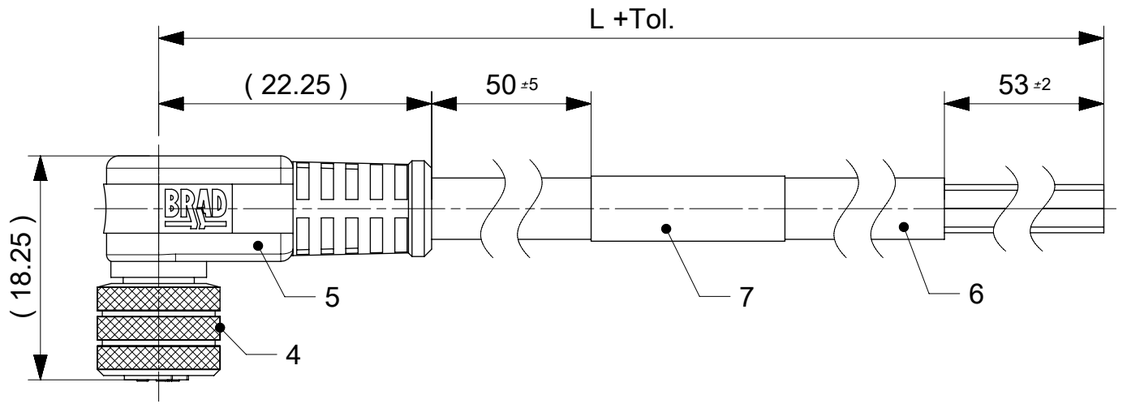

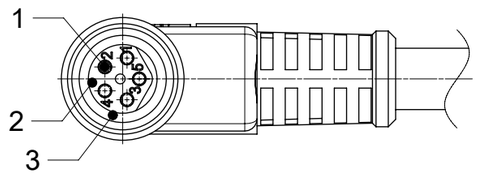

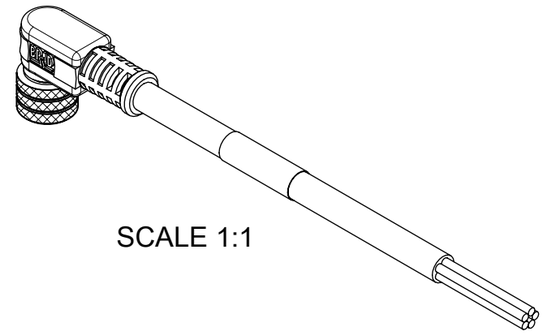

SCALE 1:1

NOTES:
- RATED VOLTAGE: 3 contacts 60V AC/DC
  4 and 5 contacts 30V AC/DC
- CURRENT RATING: 3, 4, 5 contacts 3A
- PROTECTION CLASS: IP 67
- TEMPERATURE: -25°C / +80°C

CONTACT POSITION FRONT VIEW:

3 CONTACTS	4 CONTACTS	5 CONTACTS
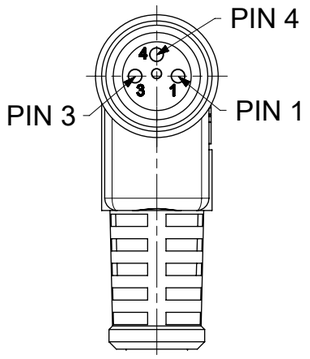	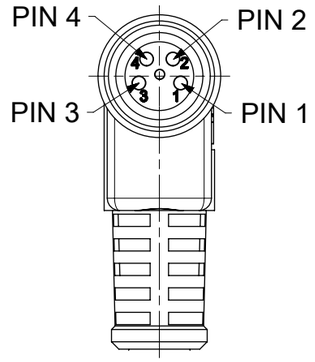	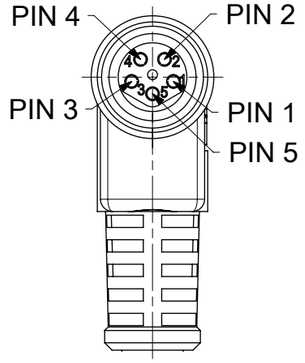

PIN	WIRE	PIN	WIRE	PIN	WIRE
1	BROWN	1	BROWN	1	BROWN
2	-	2	WHITE	2	WHITE
3	BLUE	3	BLUE	3	BLUE
4	BLACK	4	BLACK	4	BLACK
				5	GREY

CODING ACCORDING TO IEC 61076-2-104

FOR OPTIONS SEE - NUMERICAL CODE - ON SHEET 2

ITEM	QTY.	DESCRIPTION	MATERIAL	FINISH
7	1	LABEL	VINYL	-
	-	PRINTING FOR CABLES IXX	-	-
6	-	CABLE	SEE SHEET 2	-
5	-	OVERMOULDING BLACK	TPU	-
4	1	NUT M8 FEMALE	BRASS	NICKEL
3	1	O-RING RED	FKM	-
2	1	INSERT FEMALE BLACK	TPU	-
1	3 / 4 / 5	CONTACT M8 FEMALE	BRASS	SELECTIVE Au OVER Ni

THIS DRAWING CONTAINS INFORMATION THAT IS PROPRIETARY TO MOLEX ELECTRONIC TECHNOLOGIES, LLC AND SHOULD NOT BE USED WITHOUT WRITTEN PERMISSION

FUNCTIONAL SYMBOLS: FA = 0, FC = 0, FP = 0
DIVISIONAL SYMBOLS

DIMENSION UNITS	SCALE
mm	2:1

GENERAL TOLERANCES (UNLESS SPECIFIED)

ANGULAR TOL	±	1.0 °
4 PLACES	±	
3 PLACES	±	
2 PLACES	±	0.05
1 PLACE	±	0.3
0 PLACES	±	0.5

DRAFT WHERE APPLICABLE MUST REMAIN WITHIN DIMENSIONS

CURRENT REV DESC: NEW P/N´S ADDED

EC NO: 650389
DRWN: RSCHIEBER 2020/12/01
CHK'D: RSILLER 2020/12/01
APPR: RSILLER 2020/12/01

INITIAL REVISION:
DRWN: FGAIK 2016/11/02
APPR: RSILLER 2016/11/14

THIRD ANGLE PROJECTION | DRAWING: A3-SIZE | SERIES: 120086

molex

CSE M8 XP AC BC RA XM SE

PRODUCT CUSTOMER DRAWING

DOCUMENT NUMBER	DOC TYPE	DOC PART	REVISION
1200868179	PSD	000	A3

MATERIAL NUMBER	CUSTOMER	SHEET NUMBER
SEE PART LIST	GENERAL MARKET	1 OF 3

DOCUMENT STATUS	P1	RELEASE DATE	2020/12/01 16:06:25

FORMAT: master-tb-prod-A3
REVISION: J
DATE: 2020/01/14

ENGINEERING NO. - NUMERICAL CODE (Available parts see PART LIST table. Other parts available upon request).

OPTIONS

4	0	X	0	0	1	X	X	X	M	X	X	X	X	X

- 40=Nano-Change M8x1 Single ended
- Poles: 3=3 Contacts, 4=4 Contacts, 5=5 Contacts
- Head style: 001=Plug Female Angled
- Cable type: See Table
- Units: M=Meter
- Length Examples: 005=0.5 unit, 010=1 unit, 100=10 units
- Overmold color: Blank (Standard)=Black, G=Black / Y=Yellow
- Nut: Blank (standard)=Knurled Brass Ni Plated, 1=Stainless Steel, 7=Teflon coat
- H= 2 pcs. of I/D Carrier PVC Transparent (Cables Ixx & P82 always with 2 pcs. of I/D Carrier)



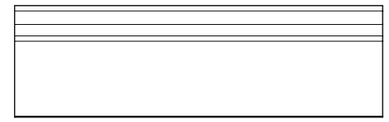

CABLE INFORMATION

CABLE TYPE	NO. OF WIRES	CROSS SECTION	CABLE JACKET	UL	CSA	TEMP. RATING	STATIC: TEMP. / BENDING RADIUS	DYNAMIC: TEMP. / BENDING RADIUS	DRAG CHAIN	SHIELD
A10	4	0.25mm²	PVC YELLOW	UL 2661/1731	I/II A/B 105°C/300V	105°C	-	-	-	NO
E02	3 / 4 / 5	0.25mm²	PVC BLACK	UL 2464/1729	C22.2 I/II A/B 80°C/300V	-	-30°C to +80°C, 10xO.D.	-10°C to +80°C, 15xO.D.	-	NO
H08	3 / 4 / 5	0.25mm²	PUR BLACK LS0H	UL 21198/10493	C22.2 I/II A/B 80°C/300V	-	-40°C to +80°C, 5xO.D.	-25°C to +80°C, 10xO.D.	2 000 000 cycles, Temp max 60°C	NO
H09	4	0.34mm²	PUR BLACK LS0H	UL 21198/10493	C22.2 I/II A/B 80°C/300V	-	-40°C to +80°C, 5xO.D.	-25°C to +80°C, 10xO.D.	2 000 000 cycles, Temp max 60°C	NO
I02	3 / 4	0.25mm²	PVC (CEI) GREY	-	-	-	-30°C to +70°C	-5°C to +70°C	-	NO
K05	3	0.34mm²	TPE YELLOW	UL ITC OR PLTC	I/II A/B 90°C/300V	105°C	-	-	-	NO
P02	3 / 4 / 5	0.25mm²	PUR / PVC BLACK	-	-	-	-30°C to +80°C, 7xO.D.	-5°C to +80°C, 15xO.D.	-	NO
P82	3 / 4	0.34mm²	PUR ORANGE	-	-	-50°C to +105°C	-	-	-	NO

CABLE LENGTH TOLERANCES

OVER [mm]	UP TO AND INCLUDING [mm]	TOLERANCES [mm]
0	305	+19
305	915	+45
915	1830	+56
1830	3660	+89
3660	7320	+165
7320	14640	+317
14640	30500	+610
30500	>	+2% of finished length

SYMBOLS: EA = 0; EC = 0; EB = 0; S = 0; ▼ = 0; C = 0; ☒ = 0; ■ = 0; ▽ = 0

THIS DRAWING CONTAINS INFORMATION THAT IS PROPRIETARY TO MOLEX ELECTRONIC TECHNOLOGIES, LLC AND SHOULD NOT BE USED WITHOUT WRITTEN PERMISSION

DIMENSION UNITS: mm | SCALE: 1:1

GENERAL TOLERANCES (UNLESS SPECIFIED)

ANGULAR TOL	± 1.0 °
4 PLACES	±
3 PLACES	±
2 PLACES	± 0.05
1 PLACE	± 0.3
0 PLACES	± 0.5

DRAFT WHERE APPLICABLE MUST REMAIN WITHIN DIMENSIONS

CURRENT REV DESC: NEW P/N´S ADDED

EC NO: 650389
DRWN: RSCHIEBER 2020/12/01
CHK'D: RSILLER 2020/12/01
APPR: RSILLER 2020/12/01

INITIAL REVISION:
DRWN: FGAIK 2016/11/02
APPR: RSILLER 2016/11/14

molex

CSE M8 XP AC BC RA XM SE

PRODUCT CUSTOMER DRAWING

DOCUMENT NUMBER	DOC TYPE	DOC PART	REVISION
1200868179	PSD	000	A3

THIRD ANGLE PROJECTION	DRAWING	SERIES	MATERIAL NUMBER	CUSTOMER	SHEET NUMBER
	A3-SIZE	120086	SEE PART LIST	GENERAL MARKET	2 OF 3

DOCUMENT STATUS	P1	RELEASE DATE	2020/12/01 16:06:25

FORMAT: master-lb-prod-A3
REVISION: H
DATE: 2018/01/18

PART LIST

No.	MOLEX PN	Engineering No.	L [mm]
1	1200270097	403001I02M030	3000
2	1200270098	403001I02M050	5000
3	1200270161	404001I02M030	3000
4	1200270162	404001I02M050	5000
5	1200270163	404001I02M100	10000
6	1200270474	403001I02M100	10000
7	1200271044	404001P82M0507	5000
8	1200271062	403001P82M050	5000
9	1200271181	403001P82M020	2000
10	1200271232	404001P82M050	5000
11	1200271333	403001H08M020G	2000
12	1200271415	403001H08M050G	5000
13	1200860177	404001A10M040	4000
14	1200860178	404001A10M050	5000
15	1200860180	404001A10M100	10000
16	1200860352	403001K05M100	10000
17	1200868004	403001H08M100	10000
18	1200868021	403001E02M030	3000
19	1200868044	403001P82M0107	1000
20	1200868054	403001H08M050	5000
21	1200868055	404001H08M010	1000
22	1200868057	404001E02M150	15000
23	1200868062	403001P02M100	10000
24	1200868077	404001H08M100	10000
25	1200868082	403001P02M150	15000
26	1200868091	403001H08M030	3000
27	1200868155	403001P02M020	2000
28	1200868159	404001P02M020	2000
29	1200868160	404001P02M100	10000
30	1200868178	405001E02M020	2000
31	1200868179	405001E02M050	5000
32	1200868180	405001E02M100	10000
33	1200868208	404001I02M020	2000
34	1200868210	403001H08M015	1500
35	1200868211	404001H08M050	5000
36	1200868223	405001P02M050	5000
37	1200868293	403001E02M010	1000
38	1200868294	403001E02M060	6000
39	1200868295	403001E02M150	15000
40	1200868296	403001E02M200	20000
41	1200868297	403001E02M250	25000
42	1200868298	403001I02M005	500
43	1200868299	403001I02M006	600
44	1200868300	403001I02M010	1000
45	1200868301	403001I02M025	2500
46	1200868356	404001E02M010	1000
47	1200868357	404001E02M0201	2000
48	1200868359	404001E02M050H	5000
49	1200868360	404001E02M200	20000
50	1200868361	404001E02M030	3000
51	1200868362	404001E02M050G	5000
52	1200868363	404001H08M030	3000
53	1200868364	404001I02M150	15000
54	1200868365	404001P02M150	15000
55	1200868391	405001P02M020	2000
56	1200868396	405001H08M020	2000
57	1200868406	405001H08M050	5000
58	1200868407	405001H08M100	10000
59	1200868422	403001E02M0501	5000
60	1200868424	404001E02M0501	5000
61	1200868441	403001I02M020Y	2000
62	1200868448	403001E02M050Y	5000
63	1200868449	403001E02M100Y	10000
64	1200868457	404001E02M050Y	5000
65	1200868458	404001E02M100Y	10000
66	1200868459	404001I02M050Y	5000
67	1200868462	403001P82M050Y	5000
68	1200868464	403001H08M100Y	10000
69	1200868465	403001P82M0107Y	1000
70	1200868466	403001H08M050Y	5000
71	1200868483	404001P82M050Y	5000
72	1200868484	403001I02M050Y	5000
73	1200868485	403001I02M100Y	10000
74	1200868497	403001H08M010	1000
75	1200868516	403001E02M300	30000
76	1200868519	403001P02M010	1000
77	1200868533	404001P02M010	1000
78	1200868589	403001P02M1001	10000
79	1200868592	403001P02M003	300
80	1200868593	403001P02M006	600
81	1200868594	403001P02M009	900
82	1200868597	403001H08M010Y	1000
83	1200868727	404001H09M100	10000
84	1200868728	404001H09M200	20000
85	1200868830	404001H09M050	5000
86	1200868848	405001H08M010	1000
87	1200868856	405001E02M010	1000
88	1200270090	403001E02M020	2000
89	1200270092	403001E02M050	5000
90	1200270093	403001E02M100	10000
91	1200270152	404001E02M020	2000
92	1200270153	404001E02M050	5000
93	1200270154	404001E02M100	10000
94	1200271328	404001H08M020	2000
95	1200868007	403001P82M010	1000
96	1200868052	403001H08M020	2000
97	1200868081	404001P02M050	5000
98	1200868089	403001P02M050	5000
99			
100			
101			
102			
103			
104			
105			
106			
107			
108			
109			
110			
111			
112			
113			
114			
115			
116			
117			
118			
119			
120			
121			
122			
123			
124			
125			
126			
127			
128			
129			
130			
131			
132			
133			
134			
135			
136			
137			
138			
139			
140			

SYMBOLS
EA = 0
EC = 0
EF = 0
S = 0
▼ = 0
C = 0
☒ = 0
■ = 0
▽ = 0

THIS DRAWING CONTAINS INFORMATION THAT IS PROPRIETARY TO MOLEX ELECTRONIC TECHNOLOGIES, LLC AND SHOULD NOT BE USED WITHOUT WRITTEN PERMISSION

DIMENSION UNITS: mm | SCALE: 1:1

GENERAL TOLERANCES (UNLESS SPECIFIED)

ANGULAR TOL	± 1.0 °
4 PLACES	±
3 PLACES	±
2 PLACES	± 0.05
1 PLACE	± 0.3
0 PLACES	± 0.5

DRAFT WHERE APPLICABLE MUST REMAIN WITHIN DIMENSIONS

CURRENT REV DESC: NEW P/N´S ADDED

EC NO: 650389
DRWN: RSCHIEBER 2020/12/01
CHK'D: RSILLER 2020/12/01
APPR: RSILLER 2020/12/01

INITIAL REVISION:
DRWN: FGAIK 2016/11/02
APPR: RSILLER 2016/11/14

THIRD ANGLE PROJECTION | DRAWING: A3-SIZE | SERIES: 120086

molex

CSE M8 XP AC BC RA XM SE

PRODUCT CUSTOMER DRAWING

DOCUMENT NUMBER	DOC TYPE	DOC PART	REVISION
1200868179	PSD	000	A3

MATERIAL NUMBER	CUSTOMER	SHEET NUMBER
SEE PART LIST	GENERAL MARKET	3 OF 3

DOCUMENT STATUS	P1	RELEASE DATE	2020/12/01 16:06:25

FORMAT: master-lb-prod-A3
REVISION: H
DATE: 2018/01/18