Product data sheet
Characteristics

XMLK200P2C23
pressure sensor XMLK - 0..200psi - 1/4NPT - 4..20mA - DIN - set of 1



Main

Range of product	OsiSense XM
Product or component type	Electronic pressure sensors
Pressure sensor type	Pressure transmitter
Pressure sensor name	XMLK
Electrical circuit type	Control circuit
Pressure sensor size	200 psi
Local display	Without
Controlled fluid	Air 0...80 °C Fresh water 0...80 °C
Fluid connection type	1/4" - 18 NPT (male)
Electrical connection	1 male connector EN 175301-803-A (ex DIN43650) 4 pins
[Us] rated supply voltage	24 V DC SELV, voltage limits: 8...33 V
Current consumption	< 20 mA
Type of output signal	Analogue
Analogue output function	4...20 mA, 2-wire
Quantity per set	Set of 1
Type of packing	Individual

Complementary

Pressure setting range	0...200 psi
Maximum permissible accidental pressure	400 psi
Destruction pressure	600 psi
Materials in contact with fluid	Ceramic Nitrile (NBR) Stainless steel type AISI 303
Operating position	Any position
Protection type	Load short-circuit Reverse polarity
Electromagnetic compatibility	Electrostatic discharge immunity test conforming to EN/IEC 61000-4-2 - test level 8 kV air, 6 kV contact Susceptibility to electromagnetic fields conforming to EN/IEC 61000-4-3 - test level 10 V/m (f = 80...1000 MHz) Electrical fast transient/burst immunity test conforming to EN/IEC 61000-4-4 - test level 2 kV

Disclaimer: This documentation is not intended as a substitute for and is not to be used for determining suitability or reliability of these products for specific user applications

	1.2/50 µs shock waves immunity test conforming to EN/IEC 61000-4-5 - test level 500 V 12 Ohm, 1 kV 42 Ohm Radiated RF fields conforming to EN/IEC 61000-4-6 - test level 10 V (f = 0.15...80 MHz) Immunity to magnetic fields conforming to EN/IEC 61000-4-8 - test level 30 A/m (f = 50 Hz)
[Uimp] rated impulse withstand voltage	0.5 kV
Response time on output	< 5 ms
Measurement accuracy	+/- 1 % of the measuring range
Resolution	0.1 % of the measuring range
Drift of the sensitivity	+/- 0.04 % of measuring range/°K
Drift of the zero point	+/- 0.03 % of measuring range/°K
Long term stability	+/- 1 % of the measuring range
Mechanical durability	>= 10000000 cycles
Product weight	0.11 kg
Diameter	36 mm
Length	65.5 mm
Scale type	Fixed differential

Environment

Standards	CE EN/IEC 61326-2-3
Product certifications	UL 508 RCM CSA C22.2 No 14 EAC
Protective treatment	TC
Ambient air temperature for operation	0...80 °C
Ambient air temperature for storage	-25...80 °C
Vibration resistance	20 gn (f = 9...2000 Hz) conforming to EN/IEC 60068-2-6
Shock resistance	25 gn for 11 ms conforming to EN/IEC 60068-2-27
IP degree of protection	IP65 conforming to EN/IEC 60529
NEMA degree of protection	NEMA 4

Offer Sustainability

RoHS (date code: YYWW)	Compliant - since 1001 - Schneider Electric declaration of conformity Schneider Electric declaration of conformity
REACh	Reference not containing SVHC above the threshold Reference not containing SVHC above the threshold

Contractual warranty

Warranty period	18 months

Dimensions

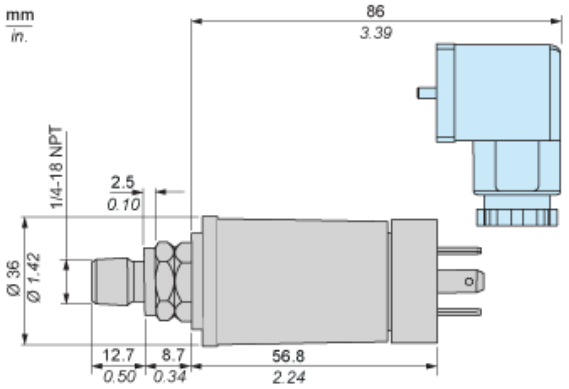

Wiring Diagram

2-Wire Technique (4-20 mA)

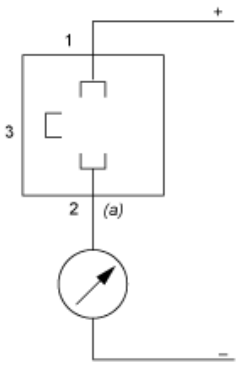

(a) I out

XMLK200P2C23

Output Curves

