IEC Plug 400 VDC, Rewireable, Straight, max. Cable Diameter 9.2 mm

new



See below:
Approvals and Compliances

Description

- Plug (rewireable) :
  Screw-on mounting
- Plug , Protection class I
- Wire size 0.75-1.5mm², 18AWG-16AWG
- Cable diameter 6.4 - 9.2 mm

Unique Selling Proposition

- Standard form acc. to IEC TS 63236-1
- Hot plug rated for disconnecting under loads up to 2.6 kW
- Ideal for direct current devices with an operating temperature up to 105 °C
- With cord retention system

Weblinks

pdf data sheet, html datasheet, General Product Information, Approvals, Distributor-Stock-Check, Accessories, Mounting instruction, Detailed request for product, Landing Page, Video

Technical Data

Ratings IEC	6.5 - 8.8 A / 294 - 400 VDC max. 2.6 kW power
Dielectric Strength	> 3 kVDC between + and - > 3 kVDC between +/- and PE (1 min)
Allowable Operation Temperature	-5 °C to 105 °C
Terminal	Screw terminal
Material: Housing	Thermoplastic, black, UL 94V-0

Appliance inlet/-outlet	Standard Sheet 2 acc. to IEC TS 63236-1 Protection Class I , ± 200 VDC

Approvals and Compliances

Detailed information on product approvals, code requirements, usage instructions and detailed test conditions can be looked up in Details about Approvals

SCHURTER products are designed for use in industrial environments. They have approvals from independent testing bodies according to national and international standards. Products with specific characteristics and requirements such as required in the automotive sector according to IATF 16949, medical technology according to ISO 13485 or in the aerospace industry can be offered exclusively with customer-specific, individual agreements by SCHURTER.

Approvals

The approval mark is used by the testing authorities to certify compliance with the safety requirements placed on electronic products.

Approval Reference Type: GP21

Approval Logo	Certificates	Certification Body	Description
	VDE Approvals	VDE	VDE Certificate Number: 40051170
	UL Approvals	UL	UR File Number: E502317

Product standards

Product standards that are referenced

Organization	Design	Standard	Description
IEC	Designed according to	IEC TS 63236-1	Direct current (DC) appliance couplers for information and communication technology (ICT) equipment installed in data centers and telecom central offices - Part 1: 2.6 kW system
UL	Designed according to	UL Subject 2695	Outline for DC rated Attachment Plugs and Outlet Devices for ICT Equipment installed in restricted access locations

Application standards

Application standards where the product can be used

Organization	Design	Standard	Description
IEC	Suitable for applications acc.	IEC/UL 62368-1	Audio/video, information and communication technology equipment - Part 1: Safety requirements

Compliances

The product complies with following Guide Lines

Identification	Details	Initiator	Description
RoHS	RoHS	SCHURTER AG	Directive RoHS 2011/65/EU, Amendment (EU) 2015/863
China RoHS	China RoHS	SCHURTER AG	The law SJ / T 11363-2006 (China RoHS) has been in force since 1 March 2007. It is similar to the EU directive RoHS.
Halogen Free	Halogen Free	SCHURTER AG	SCHURTER strives to offer our customers halogen free products.
REACH	REACH	SCHURTER AG	On 1 June 2007, Regulation (EC) No 1907/2006 on the Registration, Evaluation, Authorization and Restriction of Chemicals 1 (abbreviated as "REACH") entered into force.
		SCHURTER AG	Green Line products are aligned with the UN's Strategic Development Goals (SDGs). Components of the products are made of sustainable, environmentally friendly materials. These include, for example, bio-based plastics or lead-free metal alloys. Products in this line can also support the economical, intelligent use of resources.

Dimensions [mm]

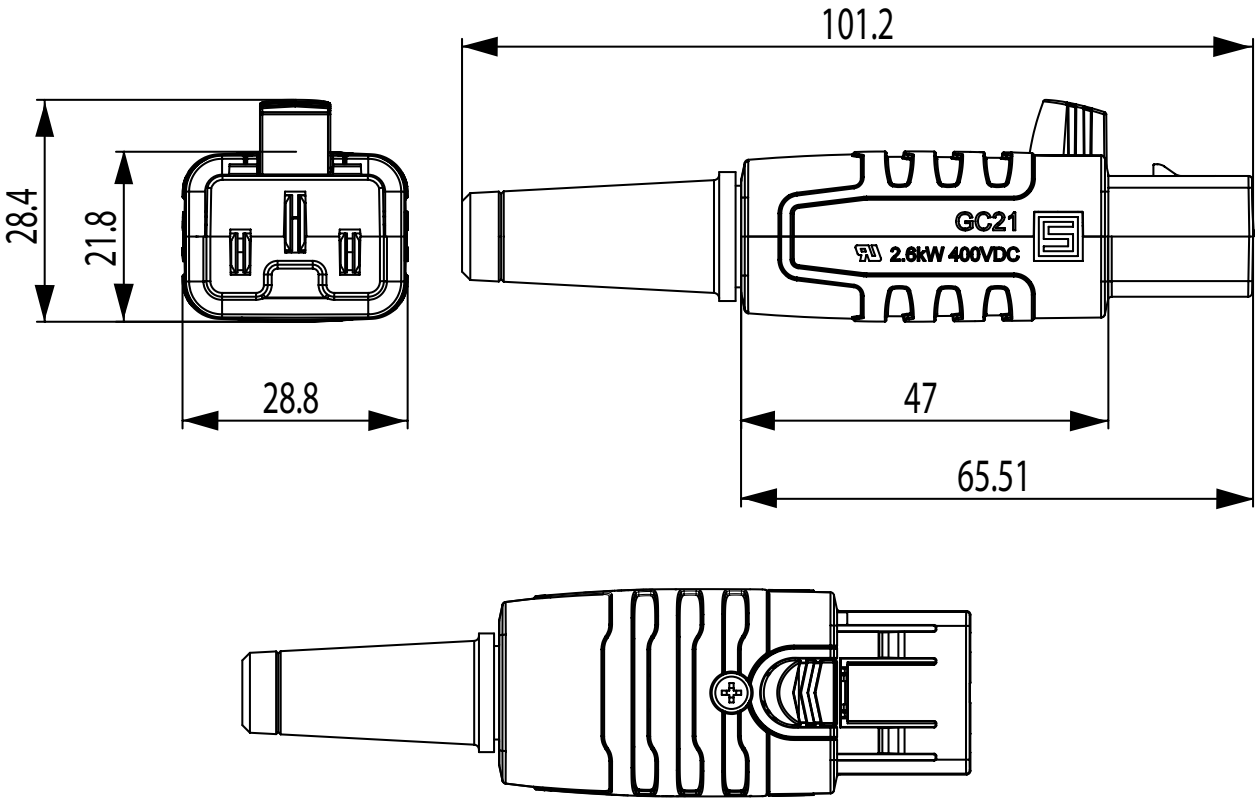

Variants

	Color	Max. cable diameter	Max. wire size	Order Number
●	black	9.2 mm	3 x 1.5 mm² / 3 x 16 AWG	3-142-747

Availability for all products can be searched real-time: https://www.schurter.com/en/info-center/support-tools/stock-check-distributors

Max. torque for screws: Terminals: 0.5 Nm, Cable clamps: 0.5 Nm, Cover: 0.3 Nm

Packaging unit 50 Pcs

Mating Outlets/Connectors



Category / Description

Appliance Outlet Overview complete

IEC Socket-Outlet 400 VDC, Snap-in Mounting, Front Side, Quick-connect or Solder Terminals	GI21
IEC Socket-Outlet 400 VDC, Snap-in Mounting, Front Side, Quick-connect or Solder Terminals	GH21

03.04.2025

The specifications, descriptions and illustrations indicated in this document are based on current information. All content is subject to modifications and amendments. Information furnished is believed to be accurate and reliable. However, users should independently evaluate the suitability and test each product selected for their own applications.