Brand of NTN corporation

Technical data

UCPLE206

Bearing units



Grey cast housing, radial insert ball bearing with socket set screws,seal with slinger

KIT CONTENT

UC206G2, PLE206

VISUAL (S)

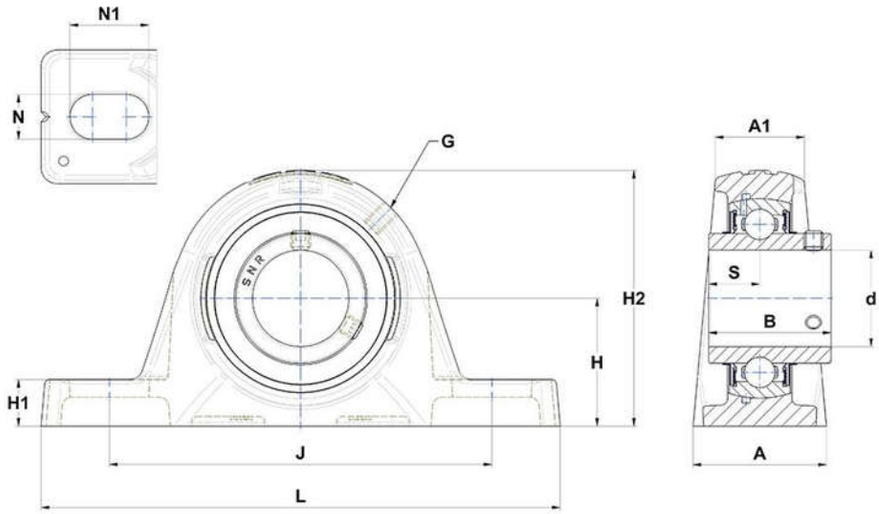

PRODUCT DEFINITION

Brand	SNR
A - Housing width	41,5 mm
A1 - Housing top width	27,5 mm
B - Width of Inner Ring	38,1 mm
d - Shaft diameter	30 mm
G - Grease fitting	M6x1

PRODUCT DEFINITION	
H - Distance mounting base to centerline spheric. seating diam.	39,7 mm
H1 - Housing foot height	14,5 mm
H2 - Housing height	79,5 mm
J - Mounting holes distance	119 mm
L - Housing length	161,5 mm
N - Mounting hole dimension	14 mm
N1 - Mounting hole length	24,5 mm
S - Distance front side/bearing centre	15,9 mm

PRODUCT PERFORMANCE	
C - Dynamic load rating	19500000 mN
C0 - Static load rating	11200000 mN
Operating temperature min.	253,15 °K
Operating temperature max.	373,15 °K

OTHER FEATURES	
Mass	1,12 kg
Recommended tightening torque for set screw	5.5 N-m