B4-E-IM4-I



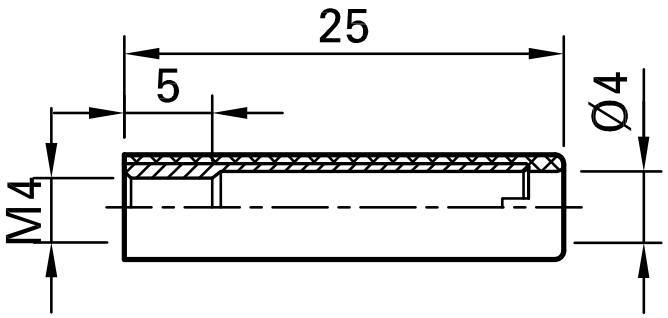

Item number 23.1035-*

Insulated, with M4 internal thread for screw connection to threaded bolts. Machined brass. Ø 4 mm rigid socket in insulator accepting spring-loaded Ø 4 mm plugs with rigid insulating sleeve. Socket with slotted head for screwdriver.

Technical data	
Diameter of plug system	4 mm
Rated Values	600 V, CAT II, 32 A
Surface treatment electrical contact	Ni
Base material electrical contact	CuZn
Colours *	21 22 23 24
Thread	M4
Test accessory acc. to	IEC EN 61010-031

Stäubli Electrical Connectors AG Stockbrunnenrain 8 4123 Allschwil/Switzerland
Tel.: +41 61 306 55 55 Fax: +41 61 306 55 56 ec.ch@staubli.com www.staubli.com

©2018 Staubli is a trademark of Stäubli International AG, registered in Switzerland and other countries. We reserve the right to modify product specifications without prior notice. Data sheet B4-E-IM4-I 10.2018