Product data sheet
Characteristics

XUSL4E2BB051L
XUSL type 4 - Body protection - Long sensing range 510 mm

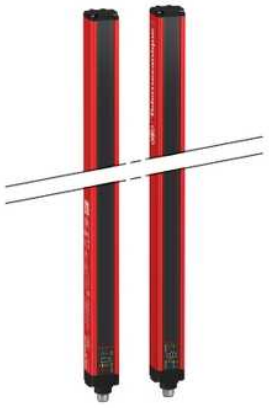

Main

Range of product	Preventa Safety detection
Product or component type	Safety light curtain type 4
Device short name	XUSL4E
Output type	2 safety outputs OSSD solid-state PNP (integrated arc suppression)
[Sn] nominal sensing distance	3...20 m by cabling 0...10 m by cabling
[Hp] Height protected	510 mm
Number of beams	2
Space between beams	500 mm
Type of start / restart	Automatic Manual
External Device Monitoring (EDM)	Selected by wiring

Complementary

Detection system	Transmitter-receiver system
Response time	2.5 ms
Kit composition	Adjustable mounting bracket(s) 1 receiver(s) 1 transmitter(s) 1 user guide with certificate of conformity on CD-ROM
[EAA] effective aperture angle	+/- 2.5 ° at 3 m
Emission	IR LED (λ = 950 nm)
[Us] rated supply voltage	24 V DC (+/- 20 %)
Supply	Power supply must meet requirements of IEC 61496-1 Power supply must meet requirements of IEC 60204-1
[Ie] rated operational current	2 A
Current consumption	42 mA no-load (transmitter) 83 mA no-load (receiver) 42 mA (transmitter) 900 mA with maximum load (receiver)
Output current limits	0.4 A for safety outputs OSSD
Output voltage	24 V
Output circuit type	DC
Voltage drop	<= 0.5 V
Local signalling	1 multi-colour LED (transmitter) 2 dual colour LEDs (receiver)
Electrical connection	1 male connector M12 5 pins (transmitter) 1 male connector M12 8 pins (receiver)
Function available	Test Muting through external safety module XPSLCMUT1160 LED display of operating modes and faults
Marking	CE
Material	Casing : aluminium Front panel : polycarbonate End caps : polypropylene
Housing colour	RAL 3000 : red
Fixing mode	By fixing brackets

The information provided in this documentation contains general descriptions and/or technical characteristics of the performance of the products contained herein.
This documentation is not intended as a substitute for and is not to be used for determining suitability or reliability of these products for specific user applications.
It is the duty of any such user or integrator to perform the appropriate and complete risk analysis, evaluation and testing of the products with respect to the relevant specific application or use thereof.
Neither Schneider Electric Industries SAS nor any of its affiliates or subsidiaries shall be responsible or liable for misuse of the information contained herein.

Product weight	1.1 kg
Offer type	Long distance

Environment

Directives	89/336/EEC - electromagnetic compatibility 2002/96/EC - WEEE directive 2002/95/EC - RoHS directive 98/37/EEC - machinery 89/655/EEC - work equipment
Product certifications	CE CULus TÜV
Safety level (correctly wired)	Type 4 conforming to IEC 61496-1 SIL 3 conforming to IEC 61508 SILCL 3 conforming to IEC 62061 Category 4 conforming to EN/ISO 13849-1 PL = e conforming to EN/ISO 13849-1
Optical characteristic	Resistance to light disturbance conforming to EN/IEC 61496-2
Mission time	20 yr
Safety reliability data	PFHd = 6.89E-9 1/h conforming to IEC 61508
Ambient air temperature for operation	-10...55 °C 14...131 °F
Ambient air temperature for storage	-25...70 °C -13...158 °F
Relative humidity	<= 95 % without condensation
IP degree of protection	IP65 IP67
Shock resistance	10 gn for 16 ms conforming to IEC 61496-1
Vibration resistance	0.35 +/- 0.05 mm (f = 10...55 Hz) conforming to IEC 61496-1

Offer Sustainability

Sustainable offer status	Green Premium product
RoHS (date code: YYWW)	Compliant - since 1425 - Schneider Electric declaration of conformity
REACh	Reference not containing SVHC above the threshold
Product environmental profile	Available Download Product Environmental
Product end of life instructions	Available Download End Of Life Manual

Dimensions Drawings

Dimensions

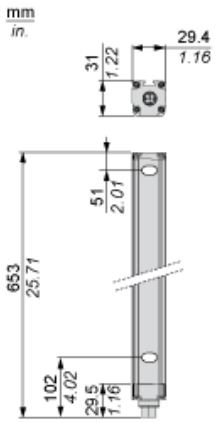

Brackets Dimensions

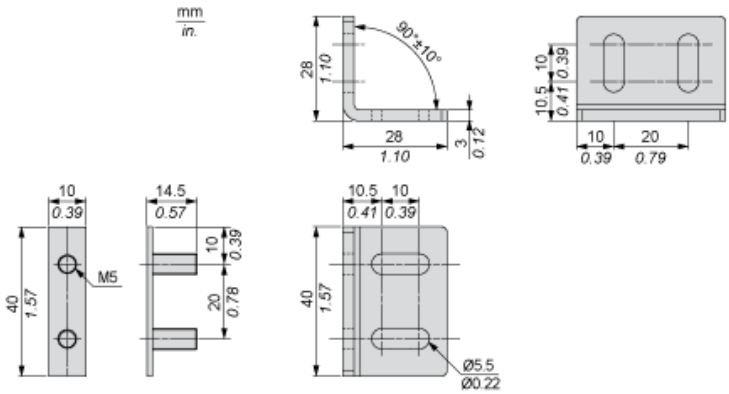

Mounting and Clearance

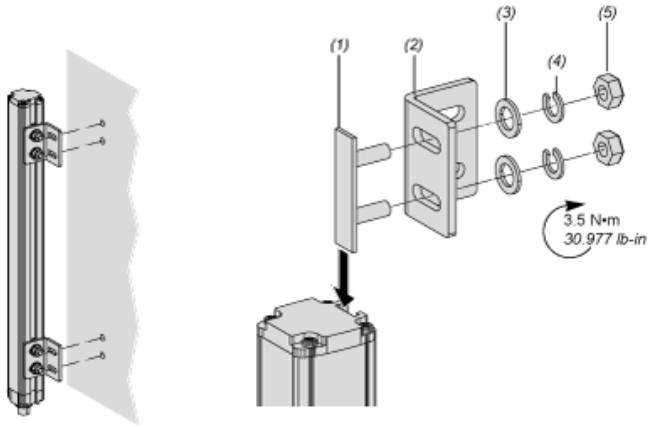

(1) Insert
(2) Bracket
(3) Washer
(4) Spring washer
(5) Nut

Wiring Diagrams

Transmitter Connections

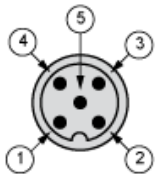

(1) +24 Vdc
(2) Configuration_0
(3) 0 Vdc
(4) Configuration_1
(5) FE

Transmitter configurations and operating modes

	High range option	Low range option	Transmitter in Test state	Forbidden wiring
Pin 4 : Configuration_1	24 V	0 V	0 V	24 V
Pin 2 : Configuration_0	0 V	24 V	0 V	24 V

Receiver Connections

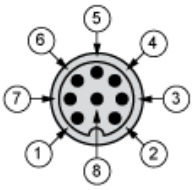

(1) OSSD1
(2) + 24 V
(3) OSSD2
(4) Configuration_A
(5) K1_K2 Feeback/Restart
(6) Configuration_B
(7) 0 Vdc
(8) FE

Receiver Configurations and Operating Modes

Automatic Start/Restart

Without External Device Monitoring (EDM) feedback loop

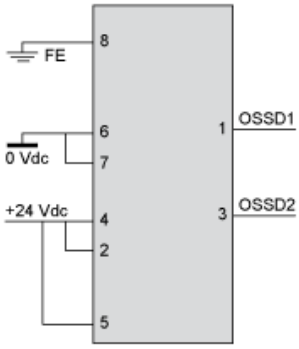

With External Device Monitoring (EDM) feedback loop

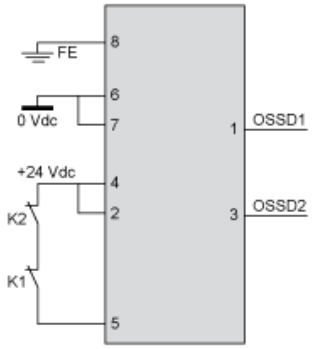

Manual Start/Restart

Without External Device Monitoring (EDM) feedback loop

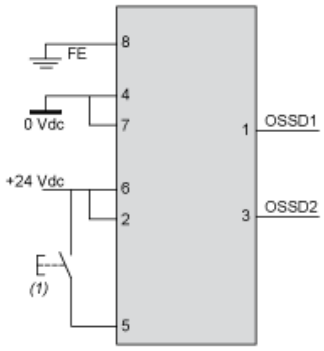

(1) Restart

With External Device Monitoring (EDM) feedback loop

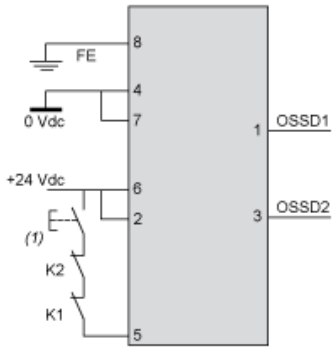

(1) Restart

Connecting to a Safety Interface

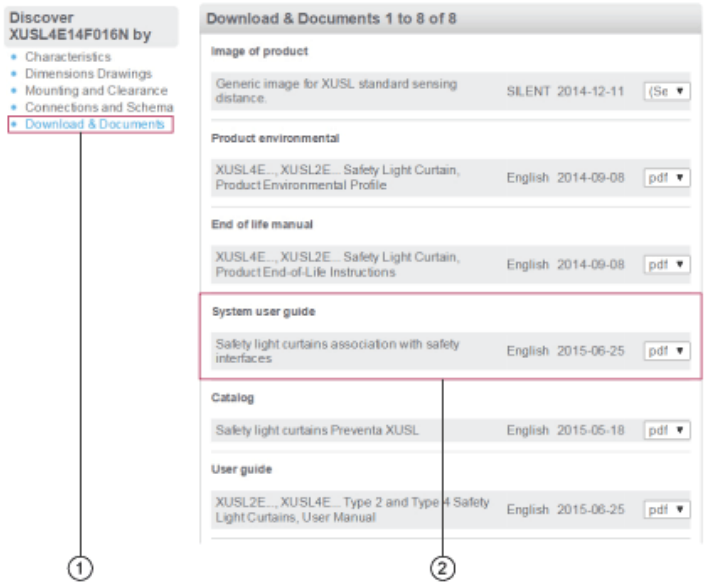

1 : Click on Download & Documents
2 : Click on System user guide

To have all connection schematics concerning our safety module, select "download and document" and download the file "Safety light curtains association with safety interfaces"