7.5mm pitch commercial low profile screw terminal blocks

Product overview

- 2 and 3 pole interlocking
- Wire protector terminals
- Low profile
- Moulded in green UL94-V0 flame retardant PA66
- Cable acceptance - 0.6-1.6mm² (22-14AWG)
- Guided pin alignment
- Anti solder wicking terminal
- cULus approved

CTBP55VK



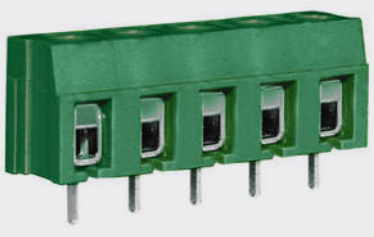

SPECIFICATION	
Rating	UL=16A/250V, VDE=24A/250V
Insulation resistance	500MΩ/500V
Withstand voltage	AC2000V/1min
Contact resistance	20mΩ (max)
Working temperature	-40°C to +105°C
Moulding	UL94-V0 flame retardant PA66
Pin/terminal	Tin plated brass
Wire protector	Phosphor bronze, nickel plated
Screw/torque	M2.5 Steel, zinc plated 0.4Nm
Recommended PCB hole size	ø1.5mm

PART NO.	POLES	LENGTH
CTBP55VK/2	2	15mm
CTBP55VK/3	3	22.5mm
CTBP55VK/4	4	30mm
CTBP55VK/5	5	37.5mm
CTBP55VK/6	6	45mm
CTBP55VK/7	7	52.5mm
CTBP55VK/8	8	60mm
CTBP55VK/9	9	67.5mm
CTBP55VK/10	10	75mm
CTBP55VK/11	11	82.5mm
CTBP55VK/12	12	90mm

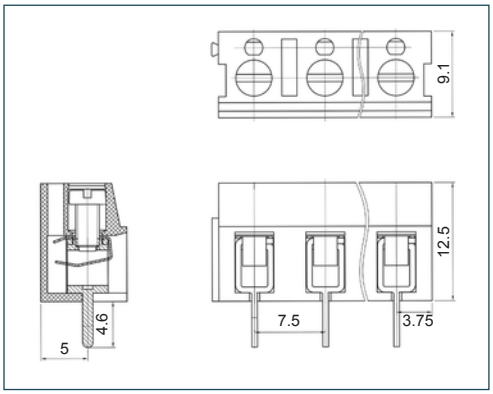

KEY FEATURES

Commercial value | Interlock mechanism | Wire protector terminals

CUSTOMISE ME · PRINTING

+44 (0)1638 716101 | sales@camdenboss.com | www.camdenboss.com

We operate a constant improvement policy, our products are subject to change without notice.

Vers 1

bsi ISO 9001 Quality Management Systems CERTIFIED FM 28614