Marquardt Mechatronik GmbH
Schloss-Str. 16
78604 Rietheim-Weilheim
Germany

Phone: +49 (0) 7424 / 99-0
Fax: +49 (0) 7424 / 99-2399
Net: www.marquardt.de
E-mail: marquardt@marquardt.de

Product image / Drawings



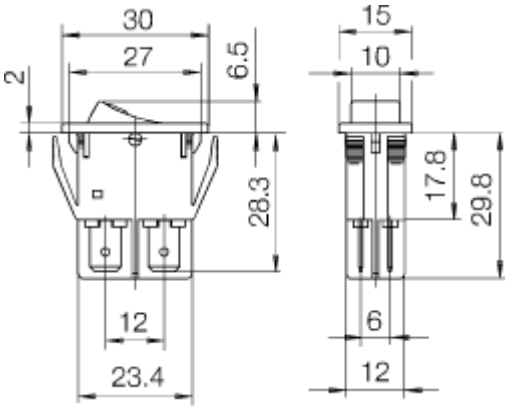

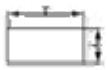

X = wall thickness

X	Y	Z
0.8 ... 5.0	27.2 ±0.1	12.2 +0.2

Technical data

Product number	**1555.3102**
Product family	Rocker switches
Actuation type	direct
Weight	8.900 g
Switch on continuous current (capacitive)	5 A
Inrush current (capacitive)	100 A
ROHS conform	yes
Switching function	ON / OFF switch (DPST)
Material fixed contact	Ag
Number of poles	2 - pole
connections	Quick-connect terminal, 6.3 x 0.8
Mechanical life endurance	5E4
Rating IEC	10 (4) A 250 V AC 5E4 16 (4) A 250 V AC 1E4
Rating North America	20 A 125 V AC 1 HP 20 A 250 V AC 2 HP 16 A 250 V AC 2 HP
Contact resistance (new condition)	< 100 (1 A 12 V DC) mOhm
Insulation resistance (new condition)	> 100 (500 V DC) MOhm
Voltage strength at 250 V	function insulation / basic insulation 1 500 V reinforced insulation 3 000 V small contact distance 500 V
Proof tracking	250 PTI
Insulation spacing	acc. to EN 61058 for reinforced or double insulation
Protection type	Connection IP 40 Actuator IP 40
Temperatures	Connection side min. -20 °C Connection side max. 100 °C Actuation side min. -20 °C Actuation side max. 55 °C Storage temperature min. -40 °C Storage temperature max. 80 °C
Flammability	UL 94 V-0
Glow wire test temperature	850 °C
Actuators and additional actuators	rocker: PA, black, identification white
Housing description	housing: PA, black
Connection surface	bearing connection silver plated
Contact material	Ag
Contact distance	≥ 3 mm
Lighting	function lighting: glow lamp, 230 V function lighting: window of PC, red
Rating Code UL	R 145 / R 174
Contact type	lifting contact

Plug force of the terminals	≤ 80 N
Operating force	3 - 5 N
Approval marks	cCSAus / CSA / ENEC 05 / UL
Suitable for appliances of protection class	II
EN 60335 cap. 30 conform "G"	yes
Additional labeling packing	UL R 174
Type of fastening	Snap fastening
Stock version	●