finder®
SWITCH TO THE FUTURE

Modular contactors
25 - 40 - 63 A

- Hotel room energy-enabling units
- Garden and night lighting
- Streetlights and car park lighting
- Bathrooms lighting control
- Office lighting control
- Pump control



22
SERIES

FINDER reserves the right to alter characteristics at any time without notice. FINDER assumes no liability for damage to persons or property, caused as a result of the incorrect use or application of its products.

25 A modular contactor - 2 pole

- 17.5 mm wide
- NO contact gap ≥ 3 mm, double break
- Continuous duty for the coil and contacts
- AC/DC silent coil (with varistor protection)
- Protective separation (reinforced insulation) between coil and contacts
- Mechanical and LED indicators as standard
- Auto-On-Off selector version available
- AgNi and $AgSnO_2$ contact versions available
- Compliant with EN 61095: 2009
- Auxiliary contact module available, quick-assembly with the main contactor (1 NO + 1 NC and 2 NO versions)
- For railway applications; materials compliant with fire and smoke characteristics (EN 45545-2:2013)
- 35 mm rail (EN 60715) mount

22.32…1xx0/22.32…4xx0
Screw terminal



For outline drawings see page 10

	22.32.0.xxx.1xx0	22.32.0.xxx.4xx0
		
	• AgNi contacts, specifically intended for resistive and slightly inductive loads as well as for motor loads	• $AgSnO_2$ contacts, specifically intended for lamp loads and for high inrush current loads
	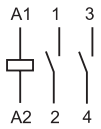 2 NO (x3x0)	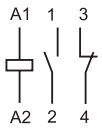 1 NO + 1 NC (x5x0)
	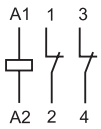 2 NC (x4x0)	

Contact specification			
Contact configuration		2 NO, 3 mm* (or 1 NO + 1 NC or 2 NC)	
Rated current/Maximum peak current	A	25/80	25/120
Rated voltage	V AC	250/440	250/440
Rated load AC1 / AC-7a (per pole @ 250 V)	VA	6250	6250
Rated current AC3 / AC-7b	A	10	10
Rated load AC15 (per pole @ 230 V)	VA	1800	1800
Single-phase motor rating (230 V AC)	kW	1	1
Rated load AC5a (per pole @ 250 V)	A	15	15
Rated current AC-7c	A	—	10
Nominal lamp rating:			
230 V incandescent/halogen	W	800	2000
fluorescent tubes with electronic ballast	W	300	800
fluorescent tubes with electromechanical ballast	W	200	500
CFL	W	100	200
230 V LED	W	100	200
LV halogen or LED with electronic ballast	W	100	200
LV halogen or LED with electromechanical ballast	W	300	800
Breaking capacity DC1: 30/110/220 V	A	25/5/1	25/5/1
Minimum switching load	mW (V/mA)	1000 (10/10)	1000 (10/10)
Contact material		AgNi	$AgSnO_2$
Coil specification			
Nominal voltage (U_N)	V DC/AC (50/60 Hz)	12 - 24 - 48 - 60 - 120 - 230	12 - 24 - 48 - 60 - 120 - 230
Rated power AC/DC	VA (50 Hz)/W	2/2.2	2/2.2
Operating range	DC/AC (50/60 Hz)	(0.8…1.1)U_N	(0.8…1.1)U_N
Holding voltage	DC/AC (50/60 Hz)	0.4 U_N	0.4 U_N
Must drop-out voltage	DC/AC (50/60 Hz)	0.1 U_N	0.1 U_N
Technical data			
Mechanical life AC/DC	cycles	$2 \cdot 10^6$	$2 \cdot 10^6$
Electrical life at rated load AC-7a	cycles	$70 \cdot 10^3$	$30 \cdot 10^3$
Operate/release time	ms	30/20	30/20
Insulation between coil and contacts (1.2/50 µs)	kV	6	6
Ambient temperature range	°C	–20…+50	–20…+50
Protection category		IP 20	IP 20
Approvals (according to type)			

• Contact gap ≥ 3 mm for NO contacts only; NC contacts ≥ 1.5 mm

25 A modular contactor - 4 pole

- 35 mm wide
- NO contact gap ≥ 3 mm, double break
- Continuous duty for the coil and contacts
- AC/DC silent coil (with varistor protection)
- Protective separation (reinforced insulation) between coil and contacts
- Mechanical and LED indicators as standard
- Auto-On-Off selector version available
- AgNi and $AgSnO_2$ contact versions available
- Compliant with EN 61095: 2009
- Auxiliary contact module available, quick-assembly with the main contactor (1 NO + 1 NC and 2 NO versions)
- For railway applications; materials compliant with fire and smoke characteristics (EN 45545-2:2013)
- 35 mm rail (EN 60715) mount

22.34…1xx0/22.34…4xx0
Screw terminal



For outline drawings see page 10

	22.34.0.xxx.1xx0	22.34.0.xxx.4xx0
		
	• AgNi contacts, specifically intended for resistive and slightly inductive loads as well as for motor loads	• $AgSnO_2$ contacts, specifically intended for lamp loads and for high inrush current loads

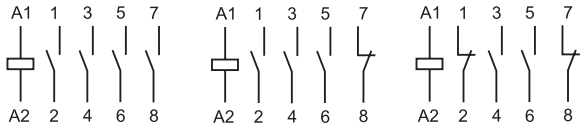

4 NO (x3x0) | 3 NO + 1 NC (x7x0) | 2 NO + 2 NC (x6x0)

Contact specification			
Contact configuration		4 NO, 3 mm* (or 3NO + 1NC or 2NO + 2NC)	
Rated current/Maximum peak current	A	25/80	25/120
Rated voltage	V AC	250/440	250/440
Rated load AC1/AC-7a (per pole @ 250 V)	VA	6250	6250
Rated current AC3/AC-7b	A	10	10
Rated load AC15 (per pole @ 230 V)	VA	1800	1800
Three-phase motor rating (400 - 440 V AC)	kW	4	4
Rated load AC5a (per pole @ 250 V)	A	15	15
Rated current AC-7c	A	—	10
Nominal lamp rating:			
230 V incandescent/halogen	W	800	2000
fluorescent tubes with electronic ballast	W	300	800
fluorescent tubes with electromechanical ballast	W	200	500
CFL	W	100	200
230 V LED	W	100	200
LV halogen or LED with electronic ballast	W	100	200
LV halogen or LED with electromechanical ballast	W	300	800
Breaking capacity DC1: 30/110/220 V	A	25/5/1	25/5/1
Minimum switching load	mW (V/mA)	1000 (10/10)	1000 (10/10)
Contact material		AgNi	$AgSnO_2$
Coil specification			
Nominal voltage (U_N)	V DC/AC (50/60 Hz)	12 - 24 - 48 - 60 - 120 - 230	12 - 24 - 48 - 60 - 120 - 230
Rated power AC/DC	VA (50 Hz)/W	2/2.2	2/2.2
Operating range	DC/AC (50/60 Hz)	(0.8…1.1)U_N	(0.8…1.1)U_N
Holding voltage	DC/AC (50/60 Hz)	0.4 U_N	0.4 U_N
Must drop-out voltage	DC/AC (50/60 Hz)	0.1 U_N	0.1 U_N
Technical data			
Mechanical life AC/DC	cycles	$2 \cdot 10^6$	$2 \cdot 10^6$
Electrical life at rated load AC-7a	cycles	$150 \cdot 10^3$	$30 \cdot 10^3$
Operate/release time	ms	18/40	18/40
Insulation between coil and contacts (1.2/50 µs)	kV	6	6
Ambient temperature range	°C	–20…+50	–20…+50
Protection category		IP 20	IP 20
Approvals (according to type)			

- Contact gap ≥ 3 mm for NO contacts only; NC contacts ≥ 1.5 mm

X-2017, www.findernet.com

40 - 63 A modular contactor - 4 pole

- NO and NC contact gap ≥ 3 mm, double break
- Continuous duty for the coil and contacts
- AC/DC silent coil (with varistor protection)
- Protective separation (reinforced insulation) between coil and contacts
- Mechanical indicator as standard
- $AgSnO_2$ contacts
- Compliant with EN 61095: 2009 and with EN 60947-4-1: 2009
- 35 mm rail (EN 60715) mount

22.44…/22.64…
Screw terminal



NEW **22.44.0.xxx.4xx0**



- For high inrush current loads 176 A
- Contact material $AgSnO_2$

NEW **22.64.0.xxx.4xx0**



- Specifically intended: for high inrush current loads 240 A
- Contact material $AgSnO_2$

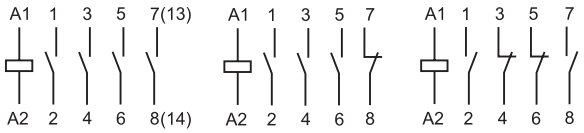

4 NO (4310) | 3 NO + 1 NC (4710) | 2 NO + 2 NC (4610)

For outline drawings see page 10

Contact specification			
Contact configuration		4 NO, (or 3NO + 1NC or 2NO + 2NC) ≥ 3 mm	
Rated current/Maximum peak current	A	40/176	63/240
Rated voltage	V AC	400/440	400/440
Rated load AC1 / AC-7a (per pole @ 400 V)	VA	16000	24000
Rated current AC3 / AC-7b (400 V)	A	22	30
Rated load AC15 (per pole @ 230 V)	VA	—	—
Three-phase motor rating (400 - 440 V AC)	kW	11	15
Rated load AC5a (per pole @ 250 V)	A	20	32
Rated current AC-7c	A	—	—
Nominal lamp rating:			
230 V incandescent/halogen	W	4000	5000
fluorescent tubes with electronic ballast	W	1500	2000
fluorescent tubes with electromechanical ballast	W	1500	2000
CFL	W	1000	1500
230 V LED	W	1000	1500
LV halogen or LED with electronic ballast	W	1000	1500
LV halogen or LED with electromechanical ballast	W	1500	2000
Breaking capacity DC1: 30/110/220 V	A	40/4/1.2	63/4/1.2
Minimum switching load	mW (V/mA)	1000 (17/50)	1000 (17/50)
Contact material		$AgSnO_2$	$AgSnO_2$
Coil specification			
Nominal voltage (U_N)	V DC/AC (50/60 Hz)	12 - 24 - 110…120 (110 V DC) - 230…240 (220 V DC)	
Rated power AC/DC	VA (50 Hz)/W	5	5
Operating range	DC/AC (50/60 Hz)	(0.85…1.1)U_N	(0.85…1.1)U_N
Holding voltage	DC/AC (50/60 Hz)	0.85 U_N	0.85 U_N
Must drop-out voltage	DC/AC (50/60 Hz)	0.2 U_N	0.2 U_N
Technical data			
Mechanical life AC/DC	cycles	$3 \cdot 10^6$	$3 \cdot 10^6$
Electrical life at rated load AC-7a	cycles	$100 \cdot 10^3$	$100 \cdot 10^3$
Operate/release time	ms	20/45	20/45
Insulation between coil and contacts (1.2/50 µs)	kV	6	6
Ambient temperature range	°C	–5…+55	–5…+55
Protection category		IP 20	IP 20
Approvals (according to type)		CE EAC cULus	

Ordering information

Exemple: 22 series, modular contactor 25 A, 4 NO contacts, coil 230 V AC/DC, $AgSnO_2$ contacts, Auto-On-Off selector + mechanical indicator + LED.

22	.	3	4	.	0	.	230	.	A	B	C	D
22	.	3	4	.	0	.	230	.	4	3	4	0

Series

Type
3 = 25 A modular contactor range
4 = 40 A modular contactor range
6 = 63 A modular contactor range

Number of contacts
2 = 2 pole
4 = 4 pole

Coil version
0 = AC (50/60 Hz)/DC

Coil rated voltage
See coil specifications

D: Special versions
0 = Standard

C: Options
1 = Mechanical indicator
2 = Mechanical indicator + LED
4 = Auto-On-Off selector + mechanical indicator + LED

B: Contact circuit
3 = All NO contacts
4 = All NC contacts (22.32 only)
5 = 1 NO + 1 NC
6 = 2 NO + 2 NC
7 = 3 NO + 1 NC

A: Contact material
1 = AgNi
4 = $AgSnO_2$

Selecting features and options: only combinations in the same row are possible.
Preferred selections for best availability are shown in **bold.**

Type	Coil version	A	B	C	D
22.32	AC/DC	**1 - 4**	**3** - 4 - 5	**2 - 4**	0
22.34	AC/DC	**1 - 4**	**3** - 6 - 7	**2 - 4**	0
22.44	AC/DC	**4**	**3** - 6 - 7	**1**	0
22.64	AC/DC	**4**	**3** - 6 - 7	**1**	0

Options

Auto-On-Off selector + mechanical indicator + LED (xx40 option)

Type 22.32 / 22.34

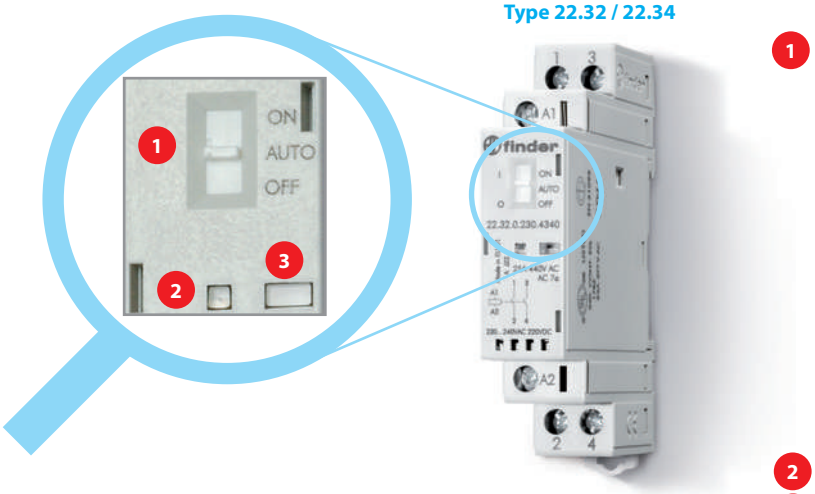

Options

1 **Selector**
The three-position manual selector has the following functions:
- **ON position** - the contacts are latched in the operated state (NO contacts - closed and NC contacts - open), the mechanical indicator is visible in its window, the LED is not illuminated.
- **AUTO position** - the state of contacts, mechanical indicator and LED follow the coil supply voltage.
- **OFF position** - even if terminals A1 - A2 are supplied with rated voltage, the coil is not energized, and so the contacts remain in the non-operated state, the mechanical indicator is not visible and the LED is not illuminated.

2 **LED**

3 **Mechanical indicator**

Type 22.44 / 22.64

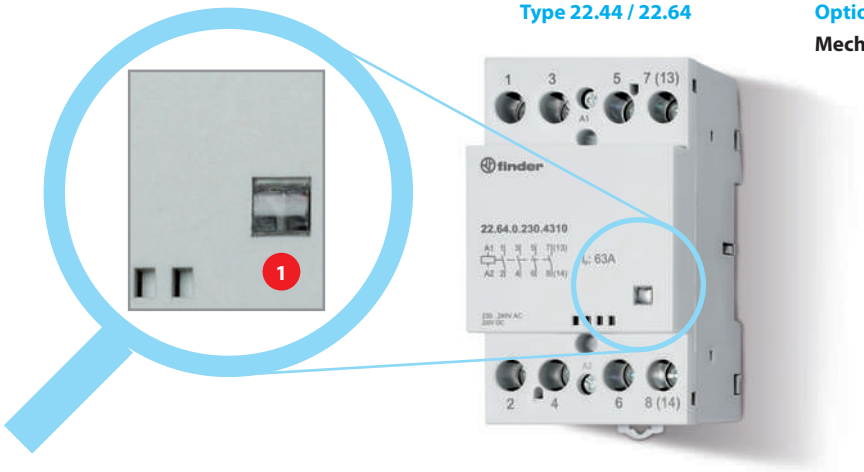

Options

Mechanical indicator

X-2017, www.findernet.com

Technical data

Insulation		22.32/22.34		22.44/22.64
Rated insulation voltage	V AC	250	440	440
Pollution degree		3*	2	3
Insulation between coil and contact set				
Type of insulation		Reinforced		Reinforced
Overvoltage category		III		III
Rated impulse voltage	kV (1.2/50 µs)	6		4
Dielectric strength	V AC	4000		2000
Insulation between adjacent contacts				
Type of insulation		Basic		Basic
Overvoltage category		III		III
Rated impulse voltage	kV (1.2/50 µs)	4		4
Dielectric strength	V AC	2500		2000
Insulation between open contacts		**NO contact**	**NC contact**	**NO/NC contacts**
Contact gap	mm	3	1.5	3
Overvoltage category		III	II	III
Rated impulse voltage	kV (1.2/50 µs)	4	2.5	4
Dielectric strength	V AC/kV (1.2/50 µs)	2500/4	2000/3	2000/3

* Only for versions without Auto-On-Off selector. For versions with Auto-On-Off selector pollution degree 2 applies.

Conducted disturbance immunity	Reference standard	
Fast transients (burst 5/50 ns, 5 kHz) at coil terminals according to EN 61000-4-4	Level 4 (4 kV)	Level 2 (2 kV)
Voltage pulses (surge 1.2/50 µs) at supply terminals (differential mode) according to EN 61000-4-5	Level 4 (4 kV)	Level 2 (2 kV)

Short circuit protection		22.32 / 22.34	22.44	22.64
Rated conditional short circuit current	kA	3	3	3
Back-up fuse	A	32 (gL/gG type)	63	80

Terminals		Solid and stranded cable	
		22.32 / 22.34	22.44 / 22.64
Max. wire size – contact terminals	mm^2	1 x 6 / 2 x 4	1 x 25 (solid) - 1 x 16 (stranded)
	AWG	1 x 10 / 2 x 12	1 x 4 (solid) - 1 x 6 (stranded)
Max. wire size – coil terminals	mm^2	1 x 4 / 2 x 2.5	1 x 2.5
	AWG	1 x 12 / 2 x 14	1 x 14
Min. wire size – contact and coil terminals	mm^2	1 x 0.2	1 x 1 (coil) - 1 x 1.5 (contacts)
	AWG	1 x 24	1 x 18 (coil) - 1 x 16 (contacts)
Screw torque	Nm	0.8	1.2 (coil terminals) - 3.5 (contact terminals)
Wire strip length	mm	9	10

Other data			22.32	22.34	22.44	22.64
Vibration resistance (10…150)Hz		g	4	4	3	3
Shock resistance		g	10	10	15	15
Power lost to the environment	without contact current	W	2	2	5	5
	with rated current	W	4.8	6.3	17	37

NOTE

22.32/22.34: It is suggested an air gap of 9 mm between adjacent relays for installations and working conditions close to the limit (that is, ambient temperature > 40 °C, coil operated for a prolonged period of time, all contacts loaded with current > 20 A).

22.44/22.64: The maximum ambient temperature with 3 adjacent contactors is + 40 °C; when more than 3 contactors are installed, it is necessary an air gap of 9 mm.
With 2 adjacent contactors the maximum ambient temperature is + 55 °C; when more than 2 contactors are installed, it is necessary an air gap of 9 mm.

X-2017, www.findernet.com

Contact specification

Ratings and utilization categories according to EN 61095: 2009

Type	Utilization category					
	AC-7a		AC-7b		AC-7c	
	Rated current (A)	Rated electrical life (Cycles)	Rated current (A)	Rated electrical life (Cycles)	Rated current (A)	Rated electrical life (Cycles)
22.32….1xx0 (AgNi contacts)	25	$70 \cdot 10^3$ (NO) $30 \cdot 10^3$ (NC)	10	$30 \cdot 10^3$	—	—
22.32….4xx0 ($AgSnO_2$ contacts)	25	$30 \cdot 10^3$	10	$30 \cdot 10^3$	10	$30 \cdot 10^3$
22.34….1xx0 (AgNi contacts)	25	$150 \cdot 10^3$ (NO) $100 \cdot 10^3$ (NC)	10	$30 \cdot 10^3$	—	—
22.34….4xx0 ($AgSnO_2$ contacts)	25	$30 \cdot 10^3$	10	$30 \cdot 10^3$	10	$30 \cdot 10^3$
22.44….4xx0	40	$100 \cdot 10^3$	22	$150 \cdot 10^3$	—	—
22.64….4xx0	63	$100 \cdot 10^3$	30	$150 \cdot 10^3$	—	—

Utilization category: **AC-7a** = Slightly inductive loads (cos φ = 0.8)
AC-7b = Motor loads; (cos φ = 0.45, I_{making} = 6x $I_{breaking}$)
AC-7c = Compensated electric discharge lamps (cos φ = 0.9, C = 10 mF/A)

H 22 - Maximum DC1 breaking capacity - Type 22.32/22.34

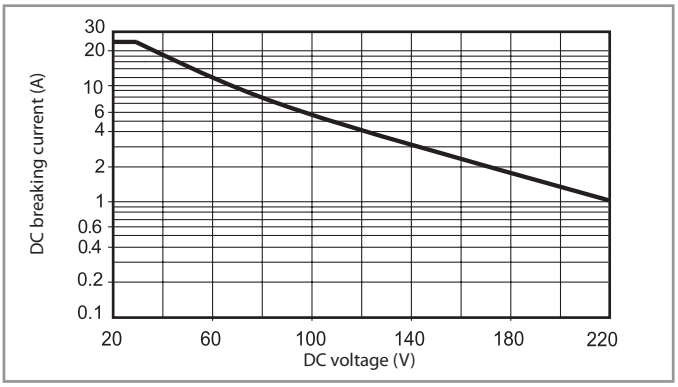

H 22 - Maximum DC1 breaking capacity - Type 22.44/22.64

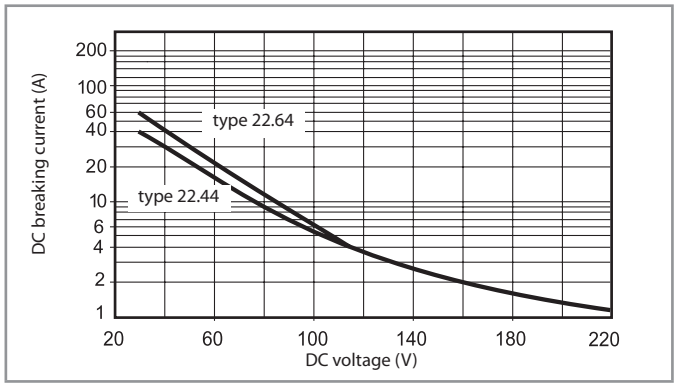

- When switching a resistive load (DC1) having voltage and current values under the curve, an electrical life of ≥ $100 \cdot 10^3$ can be expected.
- In the case of DC13 loads, the connection of a diode in parallel with the load will permit a similar electrical life as for a DC1 load.
  Note: the release time for the load will be increased.

Coil specifications

AC/DC version data (type 22.32)

Nominal voltage U_N	Coil code	Operating range U_{min}	Operating range U_{max}	Rated coil consumption I_N at U_N (AC)
V		V	V	mA
12	**0**.012	9.6	13.2	165
24	**0**.024	19.2	26.4	83
48	**0**.048	38.4	52.8	42
60	**0**.060	48	66	33
120 (110…125)	**0**.120	88	138	16.5
230 (230…240 AC) (220 DC)	**0**.230	184 (AC) 176 (DC)	264 (AC) 242 (DC)	8.7

AC/DC version data (type 22.34)

Nominal voltage U_N	Coil code	Operating range U_{min}	Operating range U_{max}	Rated coil consumption I_N at U_N (AC)
V		V	V	mA
12	**0**.012	9.6	13.2	165
24	**0**.024	19.2	26.4	83
48	**0**.048	38.4	52.8	42
60	**0**.060	48	66	33
120 (110…125)	**0**.120	88	138	16.5
230 (230…240 AC) (220 DC)	**0**.230	184 (AC) 176 (DC)	264 (AC) 242 (DC)	8.7

AC/DC version data (type 22.44 / 22.64)

Nominal voltage U_N	Coil code	Operating range U_{min}	Operating range U_{max}	Rated coil consumption I_N at U_N (AC)
V		V	V	mA
12	**0**.012	10.2	13.2	417
24	**0**.024	20.4	26.4	208
120 (110…125)	**0**.120	102	138	41
230 (230…240 AC) (220 DC)	**0**.230	196	264 (AC) 242 (DC)	21

R 22 - Coil operating range v ambient temperature

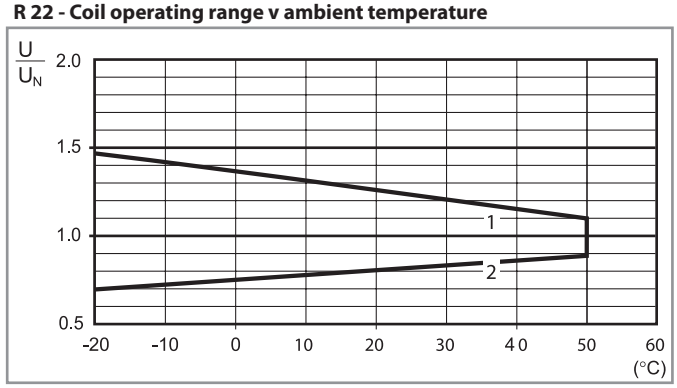

1 - Max. permitted coil voltage.
2 - Min. pick-up voltage with coil at ambient temperature.

X-2017, www.findernet.com

Wiring diagrams

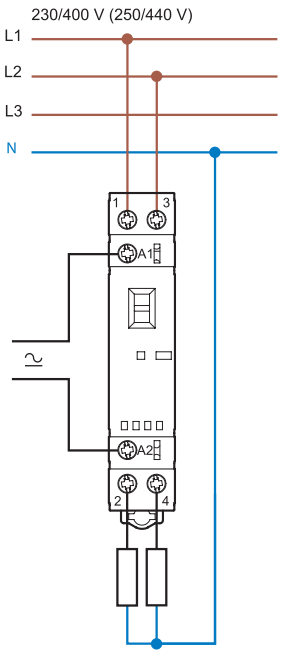

Type 22.32

Line and neutral switched

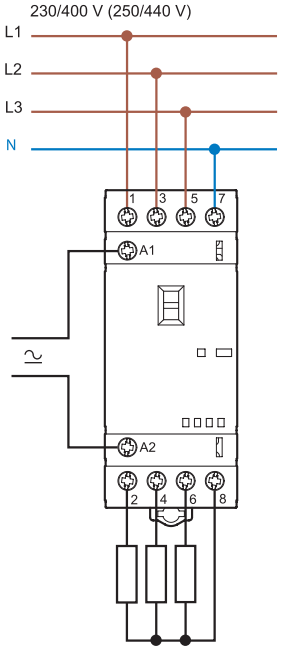

Type 22.34

Line only switched

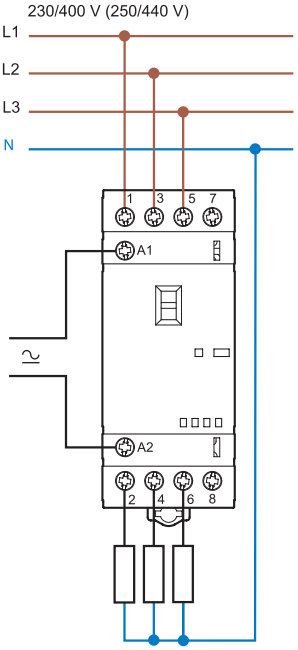

Type 22.34

Line and neutral switched

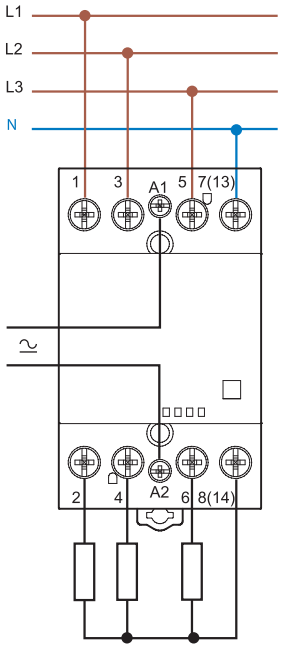

Type 22.44/22.64

Line only switched

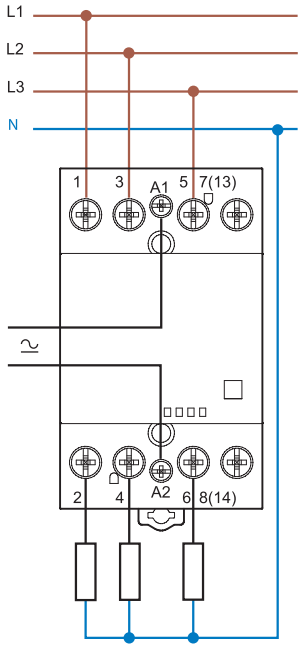

Type 22.44/22.64

Outline drawings

Type 22.32
Screw terminal

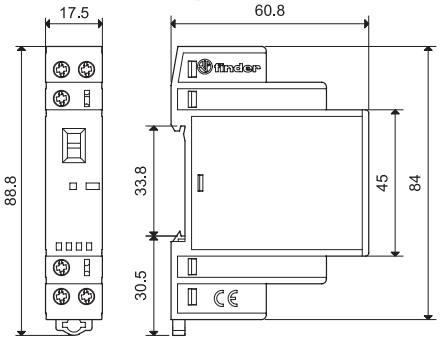

Type 22.32 + 022.33/022.35
Screw terminal

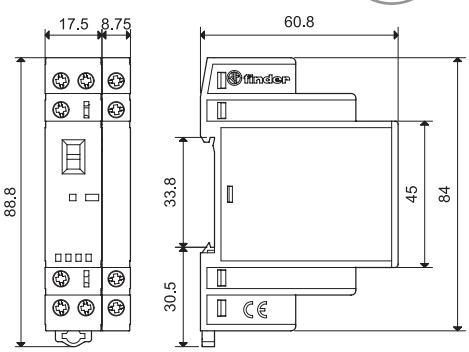

Type 22.34
Screw terminal

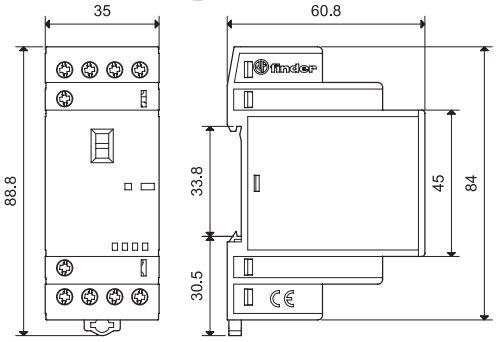

Type 22.34 + 022.33/022.35
Screw terminal

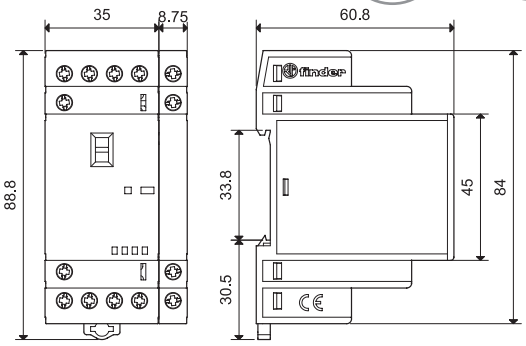

Type 22.44/22.64
Screw terminal

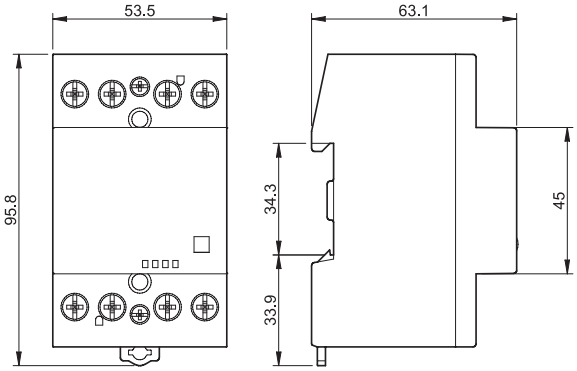

Type 22.44/22.64 + 022.63/022.65
Screw terminal

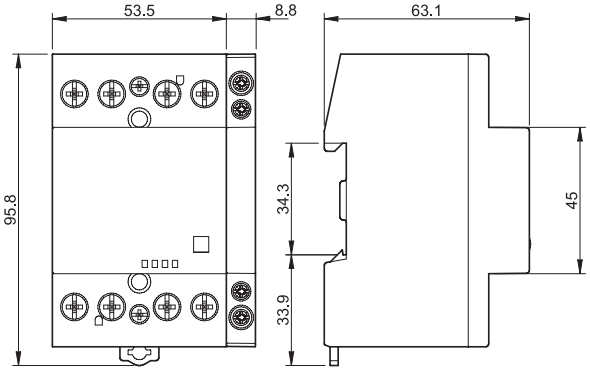

Type 022.33/022.35
Screw terminal

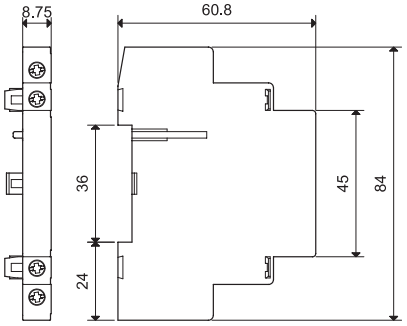

Type 022.63/022.65
Screw terminal

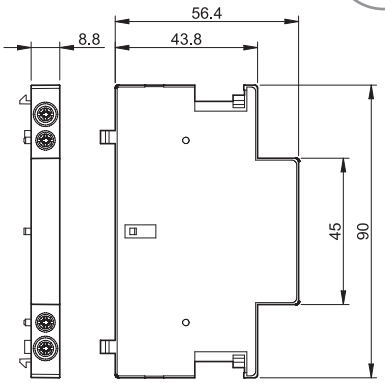

L

X-2017, www.findernet.com

Auxiliary modules

Mechanically linked contacts according to Annex L of EN 60947-5-1

		022.33	022.35	022.63	022.65
					
					
Type of contactor		Type 22.32 Type 22.34		Type 22.44 Type 22.64	
Contact specification					
Contact configuration		2 NO	1 NO + 1 NC	2 NO	1 NO + 1 NC
Conventional free air thermal current I_{th}	A	6		6	
Rated power AC15 (230 V)	VA	700		700	
Electrical life at rated load	cycles	$30 \cdot 10^3$		$30 \cdot 10^3$	
Minimum switching load	mW (V/mA)	1000 (10/10)		1000 (10/10)	
Contact material		AgNi		AgNi	
Short circuit protection					
Rated conditional short circuit current	kA	1		1	
Back-up fuse	A	6 (gL/gG type)		6 (gL/gG type)	
Terminals		**Solid and stranded cable**		**Solid and stranded cable**	
Max. wire size	mm^2	1 x 4 / 2 x 2.5		1 x 2.5	
	AWG	1 x 12 / 2 x 14		1 x 14	
Min. wire size	mm^2	1 x 0.2		1 x 1	
	AWG	1 x 24		1 x 18	
Screw torque	Nm	0.6		0.6	
Wire strip length	mm	9		9	
Power lost to the environment					
without contact current	W	—		—	
with rated current	W	0.5		0.5	
Approvals (according to type)		CE EAC RINA cULus		CE EAC cULus	

NOTE: It is not possible to assembly the auxiliary module on 22.32.0.xxx.x4x0 (2 NC versions).



22.32 + 022.33/022.35



22.44 + 022.63/022.65



22.34 + 022.33/022.35



22.64 + 022.63/022.65

L

X-2017, www.findernet.com

Accessories



020.01

Adaptor for panel mounting (for 22.32 type), plastic, 17.5 mm wide	020.01

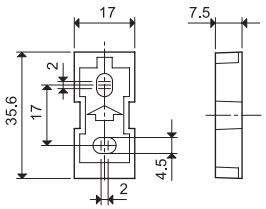



011.01

Adaptor for panel mounting (for 22.34 type), plastic, 35 mm wide	011.01

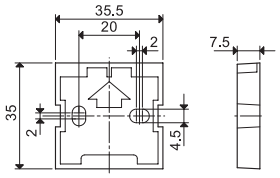

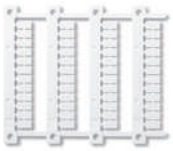

060.48

Sheet of marker tags (CEMBRE Thermal transfer printers) for all relays (48 tags), 6 x 12 mm	060.48



019.01

Identification tag, plastic, 1 tag, 17x25.5 mm	019.01



022.09

Separator for rail mounting, plastic, 9 mm wide	022.09

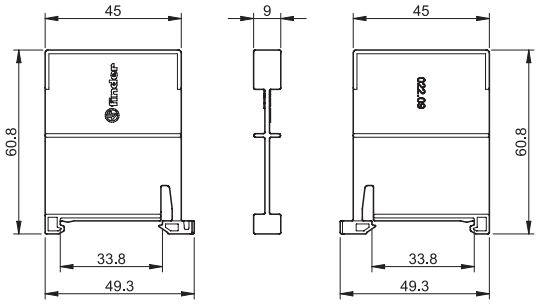

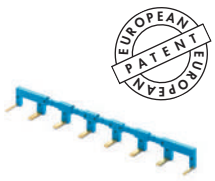

022.18

8-way jumper link for type 22.32, 17.5 mm wide	022.18 (blue)
Rated values	10 A - 250 V

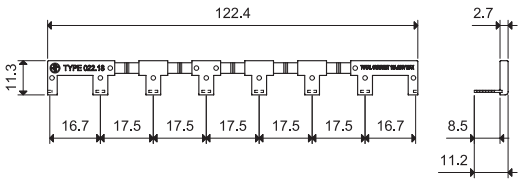

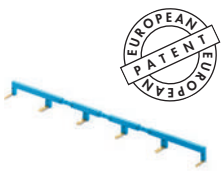

022.26

6-way jumper link for type 22.34, 35 mm wide	022.26 (blue)
Rated values	10 A - 250 V

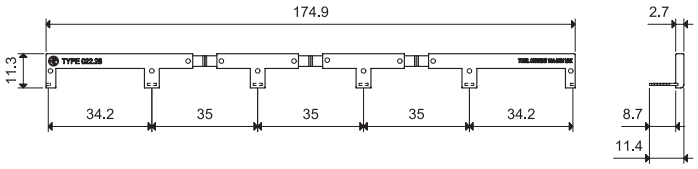

L

X-2017, www.findernet.com

Please see general technical information