5/2-directional valve, Series CD01-PA

- ISO 15407-1
- 26 mm
- 5/2
- double solenoid
- Qn = 1010 l/min
- Compressed air connection output base plate DIN ISO 15407-1
- Electrical connection Plug, EN 175301-803, form C
- Manual override with detent without detent without



Type	Spool valve, positive overlapping
Sealing principle	Soft sealing
Connection type	Plate connection
Standards	ISO 15407-1, 26 mm
Connector standard	EN 175301-803
Certificates	Free of substances that impair surface wetting in the coating process
Working pressure min./max.	See table below
Control pressure min./max.	2 ... 10 bar
Ambient temperature min./max.	See table below
Medium temperature min./max.	See table below
Medium	Compressed air
Max. particle size	50 µm
Oil content of compressed air	0 ... 5 mg/m³
Nominal flow Qn	1010 l/min
Compressed air connection	according to ISO 15407-1
Protection class with connection	IP65
Duty cycle	100 %
Typ. switch-on time	17 ms
Typ. switch-off time	17 ms
Mounting screw	M4 with hexagon socket
Mounting screw tightening torque	2,5 Nm
Weight	0,26 kg

Technical data

Part No.		MO	Operational voltage DC	Operational voltage AC 50 Hz
5763520220			24 V	-
5763520620			24 V	-
5763525220			-	24 V
5763525270			-	110 V
5763525670			-	110 V
5763525280			-	230 V
5763650220			24 V	-
5763650620			24 V	-
5763655270			-	110 V
5763655670			-	110 V
5763655280			-	230 V
5763530220			24 V	-
5763530620			24 V	-
5763530920		—	24 V	-
5763535270			-	110 V
5763535670			-	110 V

Part No.	Operational voltage AC 60 Hz	Voltage tolerance DC	Voltage tolerance AC 50 Hz	Voltage tolerance AC 60 Hz
5763520220	-	-10% / +10%	-	-
5763520620	-	-10% / +10%	-	-
5763525220	24 V	-	-10% / +15%	-10% / +15%
5763525270	110 V	-	-10% / +15%	-10% / +15%
5763525670	110 V	-	-10% / +15%	-10% / +15%
5763525280	230 V	-	-10% / +15%	-10% / +15%
5763650220	-	-10% / +10%	-	-
5763650620	-	-10% / +10%	-	-
5763655270	110 V	-	-10% / +15%	-10% / +15%
5763655670	110 V	-	-10% / +15%	-10% / +15%
5763655280	230 V	-	-10% / +15%	-10% / +15%
5763530220	-	-10% / +10%	-	-
5763530620	-	-10% / +10%	-	-
5763530920	-	-10% / +10%	-	-
5763535270	110 V	-	-10% / +15%	-10% / +15%
5763535670	110 V	-	-10% / +15%	-10% / +15%

Part No.	Power consumption DC	Holding power AC 50 Hz	Holding power AC 60 Hz	Switch-on power AC 50 Hz
5763520220	1,6 W	-	-	-
5763520620	1,6 W	-	-	-
5763525220	-	2,2 VA	1,85 VA	3 VA
5763525270	-	3 VA	2,4 VA	4,2 VA
5763525670	-	3 VA	2,4 VA	4,2 VA
5763525280	-	2,3 VA	2 VA	3,2 VA

Part No.	Power consumption DC	Holding power AC 50 Hz	Holding power AC 60 Hz	Switch-on power AC 50 Hz
5763650220	1,6 W	-	-	-
5763650620	1,6 W	-	-	-
5763655270	-	3 VA	2,4 VA	4,2 VA
5763655670	-	3 VA	2,4 VA	4,2 VA
5763655280	-	2,3 VA	2 VA	3,2 VA
5763530220	1,6 W	-	-	-
5763530620	1,6 W	-	-	-
5763530920	2,06 W	-	-	-
5763535270	-	3 VA	2,4 VA	4,2 VA
5763535670	-	3 VA	2,4 VA	4,2 VA

Part No.	Switch-on power AC 60 Hz	Pilot	Nominal flow 1 ▸ 2	Nominal flow 2 ▸ 3
5763520220	-	Internal	1010 l/min	1010 l/min
5763520620	-	Internal	1010 l/min	1010 l/min
5763525220	2,6 VA	Internal	1010 l/min	1010 l/min
5763525270	3,4 VA	Internal	1010 l/min	1010 l/min
5763525670	3,4 VA	Internal	1010 l/min	1010 l/min
5763525280	2,8 VA	Internal	1010 l/min	1010 l/min
5763650220	-	External	1010 l/min	1010 l/min
5763650620	-	External	1010 l/min	1010 l/min
5763655270	3,4 VA	External	1010 l/min	1010 l/min
5763655670	3,4 VA	External	1010 l/min	1010 l/min
5763655280	2,8 VA	External	1010 l/min	1010 l/min
5763530220	-	Internal	1010 l/min	1010 l/min
5763530620	-	Internal	1010 l/min	1010 l/min
5763530920	-	Internal	1010 l/min	1010 l/min
5763535270	3,4 VA	Internal	1010 l/min	1010 l/min
5763535670	3,4 VA	Internal	1010 l/min	1010 l/min

Part No.	Working pressure min./max.	Ambient temperature min./max.
5763520220	2 ... 10 bar	-15 ... 50 °C
5763520620	2 ... 10 bar	-15 ... 50 °C
5763525220	2 ... 10 bar	-15 ... 50 °C
5763525270	2 ... 10 bar	-15 ... 50 °C
5763525670	2 ... 10 bar	-15 ... 50 °C
5763525280	2 ... 10 bar	-15 ... 50 °C
5763650220	-0,95 ... 16 bar	-15 ... 50 °C
5763650620	-0,95 ... 16 bar	-15 ... 50 °C
5763655270	-0,95 ... 16 bar	-15 ... 50 °C
5763655670	-0,95 ... 16 bar	-15 ... 50 °C
5763655280	-0,95 ... 16 bar	-15 ... 50 °C
5763530220	2 ... 10 bar	-15 ... 50 °C
5763530620	2 ... 10 bar	-15 ... 50 °C
5763530920	2 ... 16 bar	0 ... 50 °C
5763535270	2 ... 10 bar	-15 ... 50 °C

Part No.	Working pressure min./max.	Ambient temperature min./max.
5763535670	2 ... 10 bar	-15 ... 50 °C

Part No.	Medium temperature min./max.	Electrical connection Pilot valve
5763520220	-15 ... 50 °C	Plug EN 175301-803, form C
5763520620	-15 ... 50 °C	Plug EN 175301-803, form C
5763525220	-15 ... 50 °C	Plug EN 175301-803, form C
5763525270	-15 ... 50 °C	Plug EN 175301-803, form C
5763525670	-15 ... 50 °C	Plug EN 175301-803, form C
5763525280	-15 ... 50 °C	Plug EN 175301-803, form C
5763650220	-15 ... 50 °C	Plug EN 175301-803, form C
5763650620	-15 ... 50 °C	Plug EN 175301-803, form C
5763655270	-15 ... 50 °C	Plug EN 175301-803, form C
5763655670	-15 ... 50 °C	Plug EN 175301-803, form C
5763655280	-15 ... 50 °C	Plug EN 175301-803, form C
5763530220	-15 ... 50 °C	Plug EN 175301-803, form C
5763530620	-15 ... 50 °C	Plug EN 175301-803, form C
5763530920	0 ... 50 °C	Plug EN 175301-803, form C
5763535270	-15 ... 50 °C	Plug EN 175301-803, form C
5763535670	-15 ... 50 °C	Plug EN 175301-803, form C

Part No.	Power consumption
5763520220	-
5763520620	-
5763525220	-
5763525270	-
5763525670	-
5763525280	-
5763650220	-
5763650620	-
5763655270	-
5763655670	-
5763655280	-
5763530220	-
5763530620	-
5763530920	Low power consumption
5763535270	-
5763535670	-

Nominal flow Qn at 6 bar and Δp = 1 bar, MO = Manual override

Technical information

The min. control pressure must be adhered to, since otherwise faulty switching and valve failure may result!
The pressure dew point must be at least 15 °C under ambient and medium temperature and may not exceed 3 °C .
The oil content of compressed air must remain constant during the life cycle.
Use only the approved oils from AVENTICS. Further information can be found in the “Technical information” document (available in the MediaCentre).

Versions with voltage of less than 50 V DC do not have a protective ground.

Technical information

Housing	Polyamide Polyoxymethylene
Seals	Acrylonitrile butadiene rubber

Dimensions

Dimensions

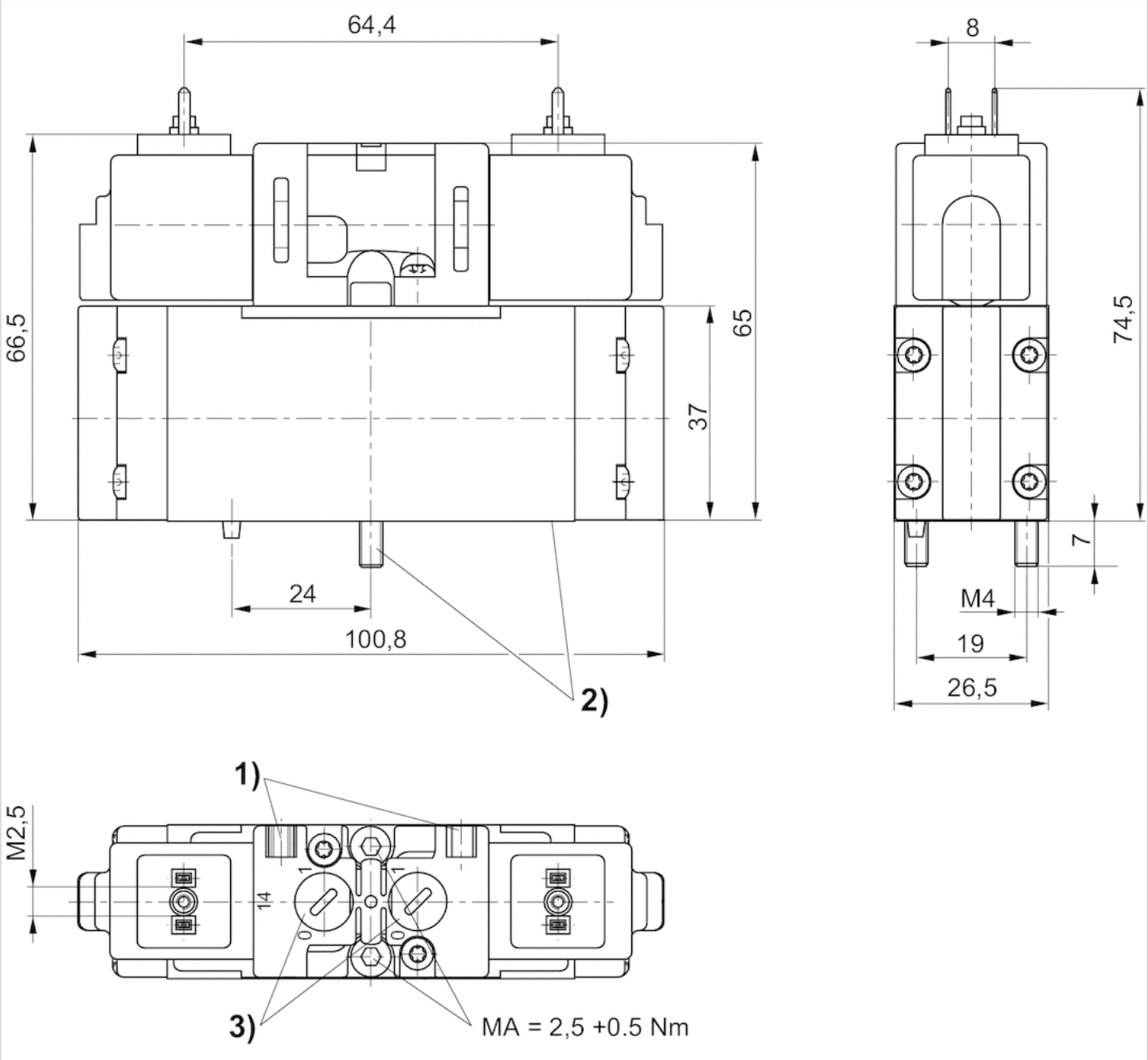

1) mounting space for name plate 2) screws and seals captive 3) manual override