S4AO- MODULE OF 4 ANALOG OUTPUTS

LUMEL
EVERYTHING COUNTS

FEATURES:

MODBUS
eCon Program
Linear chrtcs.

INPUTS:

2x RS 485

OUTPUTS:

4x

GALVANIC ISOLATION:

USB
Supply
RS 485
RS 485
RS 485



- Conversion of RS-485 MODBUS data into standard signals in 4 channels (current 0/4...20 mA or voltage 0...10 V).
- Possibility of connection via internal RS-485 port in order to increase no of analog outputs in other devices.
- Two independent communication ports (possibility to work as Master/Slave).
- Master Modbus function dedicated to read out data from other RS-485 devices and to scale analog value.
- Slave Modbus function to set the signal on analog outputs.
- Outputs working time counter.
- Mounting on a TS35 rail.
- Galvanic separation between 2 groups of outputs.
- Possibility of configuration through USB without power supply..

EXAMPLE OF APPLICATION

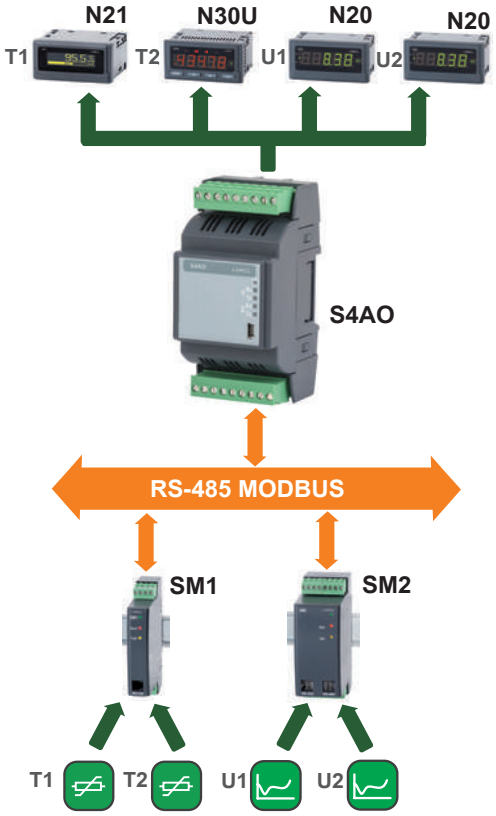

Retransmission of analog signals through S4AO.

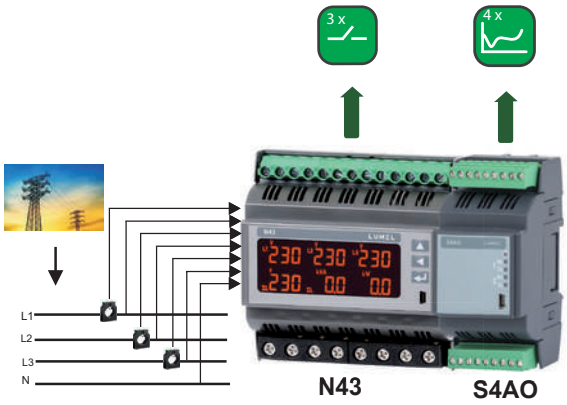

Increasing number of analog outputs in power network meters by adding S4AO module.

DIGITAL INTERFACE

Interface type	Transmission protocol	Modes	Baud rate
RS-485	Modbus RTU	8N2,8E1,8O1,8N1	1.2, 2.4, 4.8, 9.6, 19.2, 38.4, 57.6, 115.2 kbit/s

OUTPUTS

Output type	Range	Remarks
Current	0...20...24 mA or 3.75...4...20...24 mA, load resistance 0...500 Ω, disposable voltage: 15 V	basic error: 0.2 % of range resolution: 0.05 % of range Additional errors in % of the basic error from ambient temperature changes: < 0.1 %/ 10 °C
Voltage	0...10...12 V load resistance > 500 Ω, disposable voltage: 15 V	basic error: 0.2 % of range resolution: 0.1 % of range Additional errors in % of the basic error from ambient temperature changes: < 0.1 %/ 10 °C

EXTERNAL FEATURES

Overall dimensions	53 x 110 x 60.5 mm	
Weight	< 0.2 kg	
Protection grade	IP50	from terminal side: IP00

Export department:
Tel: +48 68 45 75 139/233/321/386
Fax: +48 68 32 54 091

LUMEL S.A.
ul. Słubicka 1
65-127 Zielona Góra
WWW.LUMEL.COM.PL

S4AO- MODULE OF 4 ANALOG OUTPUTS

RATED OPERATING CONDITIONS

Supply voltage	85...253 V a.c. 40...400 Hz;90...300 V d.c. or 20...40 V a.c. 40...400 Hz; 20...60 Vd.c.	
Temperature	ambient: -10...23...+55°C	storage: -25...+70°C
Relative humidity	< 95% (inadmissible condensation)	
Operating position	on a TS35 rail	
External magnetic field	0...40...400 A/m	

SAFETY AND COMPABILITY REQUIREMENTS

Electromagnetic compatibility	noise immunity	acc. to EN 61000-6-2
	noise emissions	acc. to EN 61000-6-4
Isolation between circuits	basic	acc. to EN 61010-1
Pollution grade	2	
Installation category	III	
Maximal phase-to-earth operating voltage	supply circuit: 300V, other circuits 50V,	
Altitude above sea level	< 2000 m	

CONNECTION DIAGRAMS

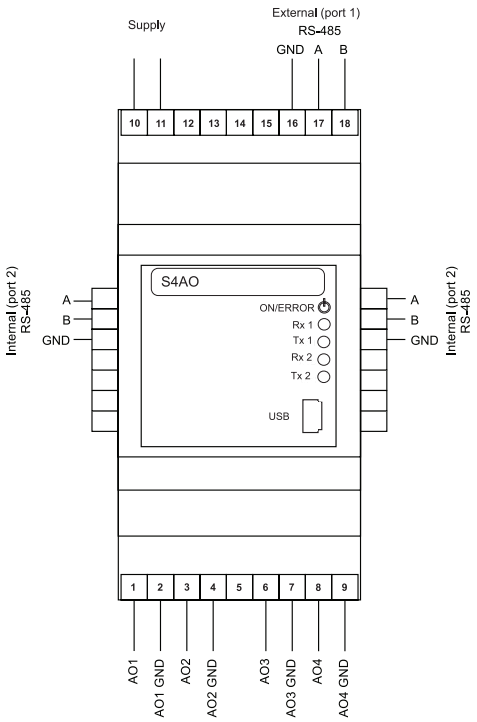

Fig. 1 Electrical connections of the S4AO module.

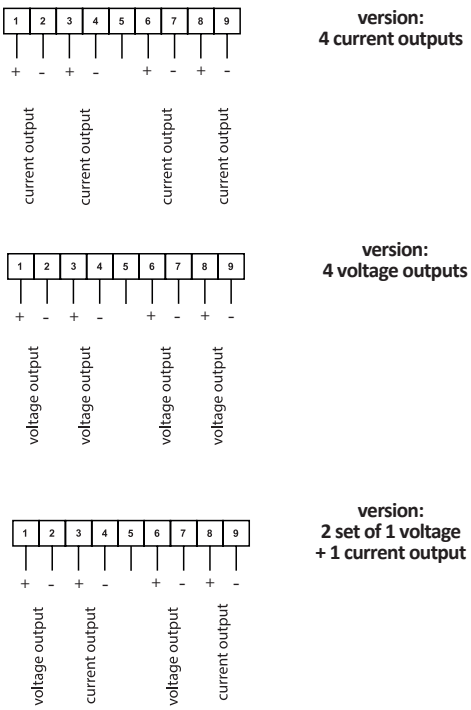

Fig. 2 Analog outputs versions.

ORDERING

ORDERING CODE:

S4AO -	X	X	XX	X	X
Outputs:					
4 current outputs, 0/4...20 mA	1				
4 voltage outputs, 0...10 V	2				
2 sets of 1 voltage + 1 current output: 0...10 V and 0/4...20 mA	3				
acc.to customer's requirements*	X				
Supply voltage:					
85...253 V a.c., 90...300 V d.c.		1			
20...40 V a.c., 20...60 V d.c.		2			
Version:					
standard			00		
custom-made*			XX		
Language:					
Polish				P	
English				E	
other*				X	
Acceptance tests:					
without extra quality requirements					0
with an extra quality inspection certificate					1
acc.to customer's requirements*					X

* - After agreeing with the manufacturer

ORDER EXAMPLE:

Code **S4AO - 1100E0** means:

S4AO - S4AO module
1 - 4 current outputs 0/4...20 mA
1 - supply 85...253 V a.c./d.c.
00 - standard version
E - English version
0 - without extra quality requirements

ACCESSORIES:

- USB CABLE A/miniUSB-B - 1m BLACK, **order code:** 20-069-00-00150
- lateral bus inter-module connector; **order code**: 24-171-01-00016,
- lateral bus to cable connector; **order code**: 24-171-01-00017.

SEE ALSO:

eCon

Free eCon software for easy programming of LUMEL products. Available on our website.



N30U Programmable digital meter of temp., resistance and standard signals



N25 configurable digital indicator



N21 temperature and d.c. standard signals universal digital meter with OLED



N43 rail mounted 3-phase power network meter

For more information about LUMEL products please visit our website: www.lumel.com.pl

Export department:
Tel: +48 68 45 75 139/233/321/386
Fax: +48 68 32 54 091

LUMEL S.A.
ul. Słubicka 1
65-127 Zielona Góra
WWW.LUMEL.COM.PL