MURR ELEKTRONIK
stay connected

7/8" FEMALE 90° FIELD-WIREABLE SCREW

5-pol. clamp section 6-8,7mm

Female 90°
5-pole
Screw terminals

Plastic housings with good resistance against chemicals and oils. The resistance to aggressive media should be individually tested for your application. Further details on request.

Link to Product

Illustration



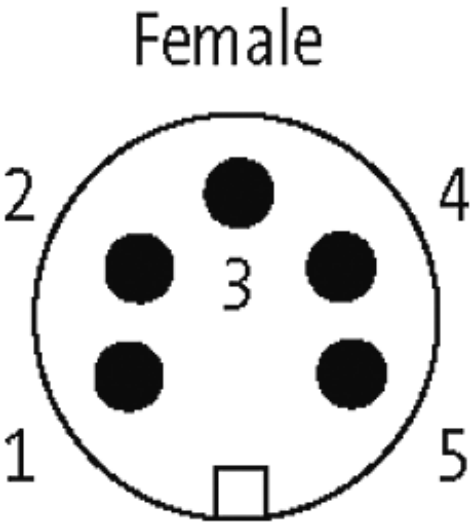

The information in this brochure has been compiled with the utmost care.
Liability for the correctness completeness and topicality of the information is restricted to gross negligence. Version: 11/14

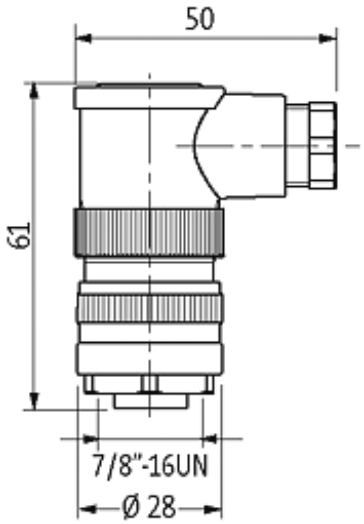

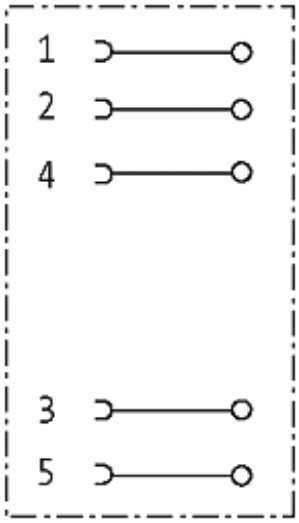

Product may differ from Image

Approvals

Form

	78261

Technical Data

Operating voltage	max. 250 V AC/DC
Operating current per contact	max. 9 A
Connection cross section	max. 1.5 mm²
Sealing range (cable diameter)	6...8 mm
Locking of ports	Screw thread 7/8" (recommended torque 1.5 Nm) self-securing
Protection	IP67 inserted and tightened (EN 60529)

General data

The information in this brochure has been compiled with the utmost care.
Liability for the correctness completeness and topicality of the information is restricted to gross negligence. Version: 11/14

Temperature range	-25...+85 °C
Commercial data	
country of origin	DE
customs tariff number	85369010
minimum order quantity	1

The information in this brochure has been compiled with the utmost care.
Liability for the correctness completeness and topicality of the information is restricted to gross negligence. Version: 11/14