W2S130-AA03-90

AC axial compact fan



ebm-papst Mulfingen GmbH & Co. KG
Bachmühle 2 · D-74673 Mulfingen
Phone +49 7938 81-0
Fax +49 7938 81-110
info1@de.ebmpapst.com
www.ebmpapst.com

Limited partnership · Headquarters Mulfingen
Amtsgericht (court of registration) Stuttgart · HRA 590344

General partner Elektrobau Mulfingen GmbH · Headquarters Mulfingen
Amtsgericht (court of registration) Stuttgart · HRB 590142

Nominal data

Type	**W2S130-AA03-90**
Motor	**M2S052-CA**

Phase		1~	1~	1~	1~
Nominal voltage	VAC	115	115	230	230
Frequency	Hz	50	60	50	60
Method of obtaining data		fa	fa	fa	fa
Valid for approval/standard		CE	CE	CE	CE
Speed (rpm)	min^{-1}	2800	3200	2800	3200
Power consumption	W	45	42	45	42
Current draw	A	0.62	0.52	0.31	0.26
Max. back pressure	Pa	60	75	60	75
Max. back pressure	in. wg	0.24	0.3	0.24	0.3
Min. ambient temperature	°C	-25	-25	-25	-25
Max. ambient temperature	°C	40	70	40	70
Starting current	A	0.9	0.76	0.45	0.38

ml = Max. load · me = Max. efficiency · fa = Free air · cs = Customer specification · ce = Customer equipment
Subject to change

Technical description

Weight	1.1 kg
Size	130 mm
Motor size	52
Rotor surface	Rotor open, painted black
Impeller material	Sheet steel, painted black
Fan housing material	Die-cast aluminum, painted black
Number of blades	7
Airflow direction	V
Direction of rotation	Counterclockwise, viewed toward rotor
Degree of protection	IP20
Insulation class	"B"
Moisture (F) / Environmental (H) protection class	H0+
Max. permitted ambient temp. for motor (transport/storage)	+ 80 °C
Min. permitted ambient temp. for motor (transport/storage)	- 40 °C
Installation position	Any
Condensation drainage holes	None
Mode	S1
Motor bearing	Ball bearing
Speed levels	Dual-voltage
Touch current according to IEC 60990 (measuring circuit Fig. 4, TN system)	< 0.75 mA
Motor protection	Thermal overload protector (TOP) with basic insulation
Protection class	I (with customer connection of protective earth)
Conformity with standards	EN 60335-1; CE
Approval	UL 507; CSA C22.2 No. 113

ebm-papst Mulfingen GmbH & Co. KG · Bachmühle 2 · D-74673 Mulfingen · Phone +49 (0) 7938 81-0 · Fax +49 (0) 7938 81-110 · info1@de.ebmpapst.com · www.ebmpapst.com

AC axial compact fan

Product drawing

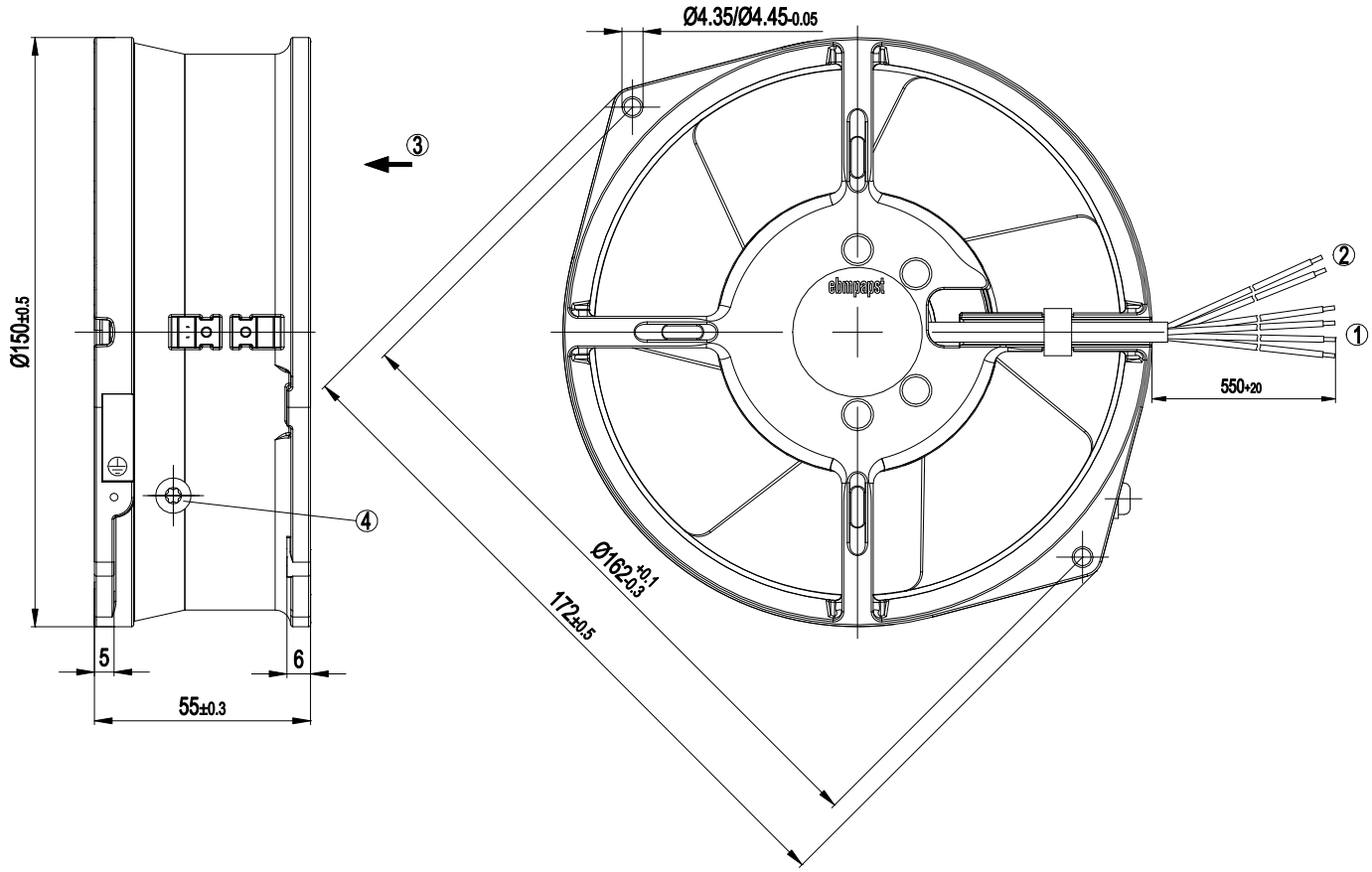

1	Cable AWG22, 4x galvanized wire ends
2	TOP wires AWG20, 2x galvanized wire ends
3	Direction of air flow "V"
4	M4 screw for fastening ground connector

ebm-papst Mulfingen GmbH & Co. KG · Bachmühle 2 · D-74673 Mulfingen · Phone +49 (0) 7938 81-0 · Fax +49 (0) 7938 81-110 · info1@de.ebmpapst.com · www.ebmpapst.com

Connection diagram

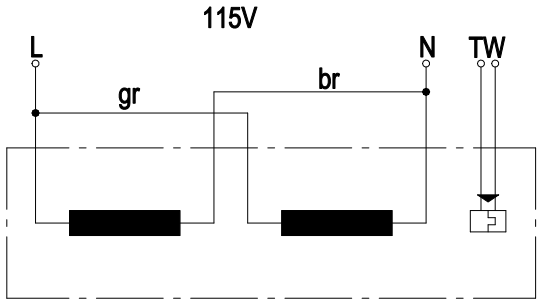

	115 V	L	black + gray	N	blue + brown
TOP	2x yellow				

Connection diagram 2

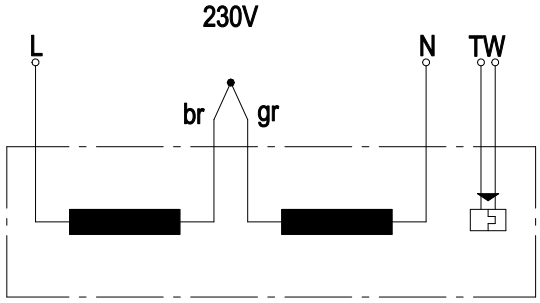

	230 V	L	black	N	blue
TOP	2x yellow		brown + gray		

ebm-papst Mulfingen GmbH & Co. KG · Bachmühle 2 · D-74673 Mulfingen · Phone +49 (0) 7938 81-0 · Fax +49 (0) 7938 81-110 · info1@de.ebmpapst.com · www.ebmpapst.com

AC axial compact fan

Curves: Air performance 50 Hz

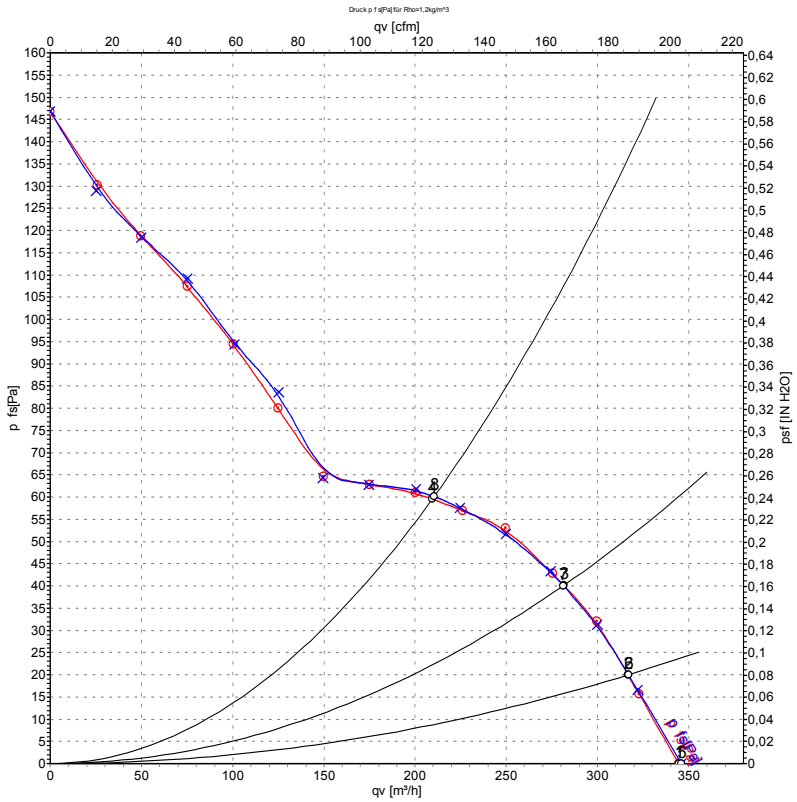

Measurement: LU-133512-1
Measurement: LU-133510-1

Air performance measured according to ISO 5801 installation category A. For detailed information on the measurement setup, contact ebm-papst. Intake sound level: Sound power level according to ISO 13347 / sound pressure level measured at 1 m distance from fan axis. The values given are valid under the specified measuring conditions and may vary due to conditions of installation. For deviations from the standard configuration, the parameters have to be checked on the installed unit.

Measured values

	U	f	n	P_e	I	q_V	p_{fs}	q_V	p_{fs}
	V	Hz	min^{-1}	W	A	m^3/h	Pa	cfm	in. wg
1	230	50	2800	45	0.31	345	0	200	0.00
2	230	50	2790	45	0.31	315	20	185	0.08
3	230	50	2775	45	0.30	280	40	165	0.16
4	230	50	2770	45	0.30	210	60	125	0.24
5	115	50	2800	45	0.62	345	0	205	0.00
6	115	50	2790	45	0.62	315	20	185	0.08
7	115	50	2775	45	0.60	280	40	165	0.16
8	115	50	2770	45	0.60	210	60	125	0.24

U = Voltage · f = Frequency · n = Speed (rpm) · P_e = Power consumption · I = Current draw · q_V = Air flow · p_{fs} = Pressure increase

ebm-papst Mulfingen GmbH & Co. KG · Bachmühle 2 · D-74673 Mulfingen · Phone +49 (0) 7938 81-0 · Fax +49 (0) 7938 81-110 · info1@de.ebmpapst.com · www.ebmpapst.com

AC axial compact fan

Curves: Air performance 60 Hz

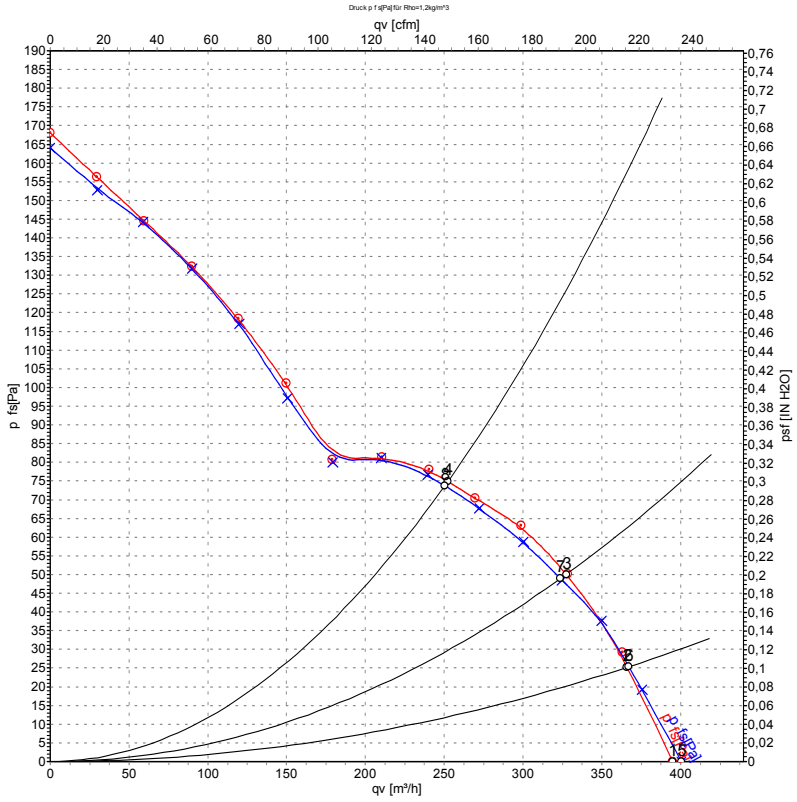

Measurement: LU-133514-1
Measurement: LU-133511-1

Air performance measured according to ISO 5801 installation category A. For detailed information on the measurement setup, contact ebm-papst. Intake sound level: Sound power level according to ISO 13347 / sound pressure level measured at 1 m distance from fan axis. The values given are valid under the specified measuring conditions and may vary due to conditions of installation. For deviations from the standard configuration, the parameters have to be checked on the installed unit.

Measured values

	U	f	n	P_e	I	q_V	p_{fs}	q_V	p_{fs}
	V	Hz	min^{-1}	W	A	m^3/h	Pa	cfm	in. wg
1	230	60	3200	42	0.26	395	0	230	0.00
2	230	60	3180	42	0.25	365	27	215	0.11
3	230	60	3150	43	0.25	330	50	195	0.20
4	230	60	3125	44	0.26	250	75	150	0.30
5	115	60	3200	42	0.52	400	0	235	0.00
6	115	60	3180	42	0.50	365	25	215	0.10
7	115	60	3150	43	0.50	325	50	190	0.20
8	115	60	3125	44	0.52	250	75	145	0.30

U = Voltage · f = Frequency · n = Speed (rpm) · P_e = Power consumption · I = Current draw · q_V = Air flow · p_{fs} = Pressure increase

ebm-papst Mulfingen GmbH & Co. KG · Bachmühle 2 · D-74673 Mulfingen · Phone +49 (0) 7938 81-0 · Fax +49 (0) 7938 81-110 · info1@de.ebmpapst.com · www.ebmpapst.com