Hour meters / timers, electromechanical

Timers, round design | **High protection rating (AC+DC)** | **HR76**



The hour meter HR76 feature a very high shock resistance.

These panel-mount counters for round panel cut-outs can be used in many different fields of application. These non-resettable counters are very robust and extremely tamper-proof.

Characteristics

- 6-digit hour meter.
- Low cost.
- High shock resistance.
- Low energy consumption.
- Magnified large figures.
- Protection IP65.
- Data retention in case of power failure.
- Long service life.

Benefits

- 50/60 Hz in the same device.
- Small mounting depth.
- Waterproof on the front and on the rear.

Applications

Operating hours measurement with construction and agricultural machinery, compressors, power units.

Type series

Description	*Mounting*	*Type*
Timer, round	screw mounting front side	**HR76.1**
Timer, round	clip mounting	**HR76.2**

Accessories

		Type / size	Description		Order no.
Mounting support (only HR76.2)			for round counters with cutout ø 53 mm	black	**N510199**
Gasket counter (only HR76.1)		**ø 71,1 mm [2.80“]**	for cut-out ø 50 mm		**N511150**

© Fritz Kübler GmbH, subject to errors and changes. 03/2023

Timers, round design | High protection rating (AC+DC) | HR76

Technical data

Electrical connection		flat pin 0.8 x 6.3 mm [0.031 x 0.25“]
Power consumption	AC 12 V DC 48 V DC	max. 0.4 VA max. 0.08 W max. 0.7 W
Rated voltages	AC (50 or 60 Hz) DC	115/230 V AC, ±10 %, 50/60 Hz 10 ... 80 V DC
On time		100 %
Number of digits		6: 99999.9 h
Count mode		adding
Height of figures		3.5 mm [0.14“] heigh
Color of figures		white on black
Reset		no reset
Operating temperature		-30 °C ... +65 °C [-22 °F ... +185 °F] (non-condensing)
Storage temperature		-40 °C ... +85 °C [-40 °F ... +149 °F]
Relative humidity at +25 °C [+77 °F]		≤ 95 % (non-condensing)
Altitude		up to 2000 m [6562‘]
Mounting position		any
Protection		IP65 (except the connections)
Housing		plastic PC (Polycarbonate)
Accuracy		< 0.02 % over the full range
Weight	HR76.1 HR76.2	56 g [1.98 oz] 54 g [1.91 oz]
Device safety	designed to protection class application area	EN 61010 part 1 2 pollution level 2

Approvals

UL compliant in accordance with	File no. E128604
CE compliant in accordance with	
EMC Directive	2014/30/EU
RoHS Directive	2011/65/EU
Low Voltage Directive	2014/35/EU
UKCA compliant in accordance with	
EMC Regulations	S.I. 2016/1091
RoHS Regulations	S.I. 2012/3032
Low Voltage Regulations	S.I. 2016/1101

© Fritz Kübler GmbH, subject to errors and changes. 03/2023

Timers, round design | High protection rating (AC+DC) | HR76

Timer, round
screw mounting front side
Type HR76.1



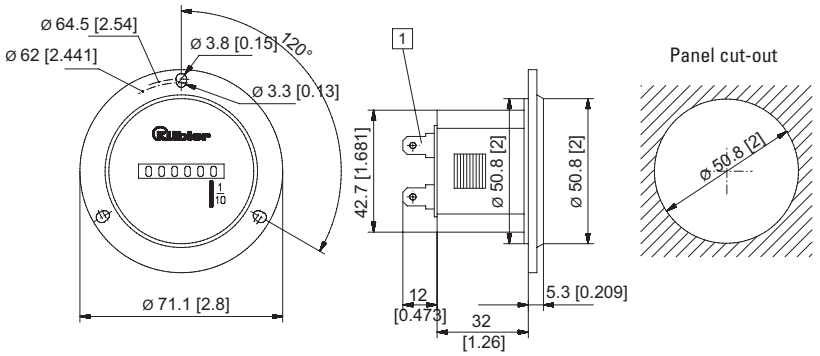

1 Electrical connection: flat pin 0.8 x 6.3 [0.031 x 0.25]

Type	Display	Voltage	Art. no. 10 ... 80 V DC	115 V	230 V	
HR76.1	6 digits	AC (50/60 Hz)		**0.135.100.301** 1)	**0.135.100.302** 1)	Gasket for front bezel N511150
	6 digits	DC	**0.135.100.373** 1)			not included in delivery

Timer, round
clip mounting
Type HR76.2





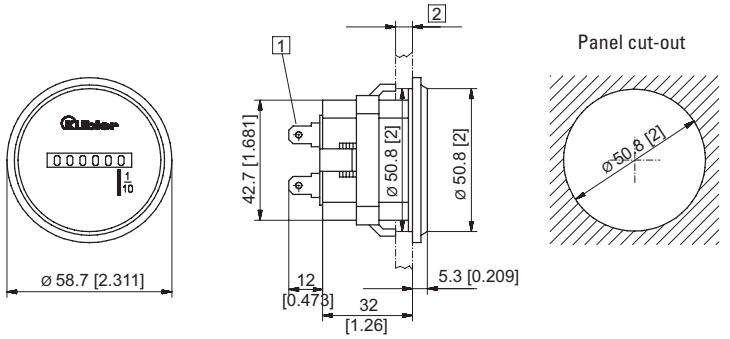

For mounting the counter onto a flat plate, see accessories chapter
Art. no.: N510199

1 Electrical connection: flat pin 0.8 x 6.3 [0.031 x 0.25] 2 max. 9 [035]

Type	Display	Voltage	Art. no. 10 ... 80 V DC	115 V	230 V	
HR76.2	6 digits	AC (50/60 Hz)		**0.135.200.301** 1)	**0.135.200.302** 1)	Gasket integrated in counter
	6 digits	DC	**0.135.200.373** 1)			

Dimensions in mm [inch]

1) Stock types

© Fritz Kübler GmbH, subject to errors and changes. 03/2023