E30483

Filter cover for pressure sensors

EXCHANGE COVER FILTER SYSTEM

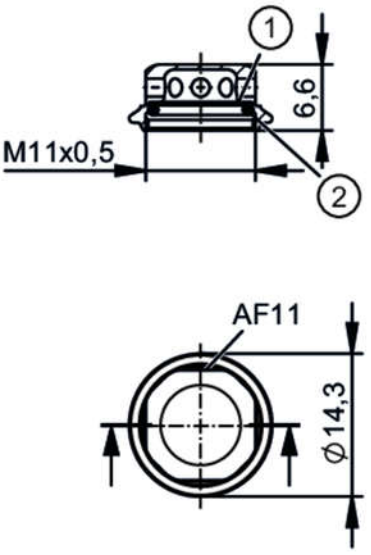

1 ventilation diaphragm
2 Gasket 8.5 x 1.0 FKM

Mechanical data		
Weight	[g]	10.2
Materials		stainless steel (1.4404 / 316L); PTFE; FKM
Tightening torque	[Nm]	2.5...3.5; (recommended tightening torque)
Accessories		
Items supplied		Filter cover including ventilation diaphragm and O-ring
Remarks		
Pack quantity		1 pcs.