Model 3789
BNC Male To Minigrabber Test Clip Breakout

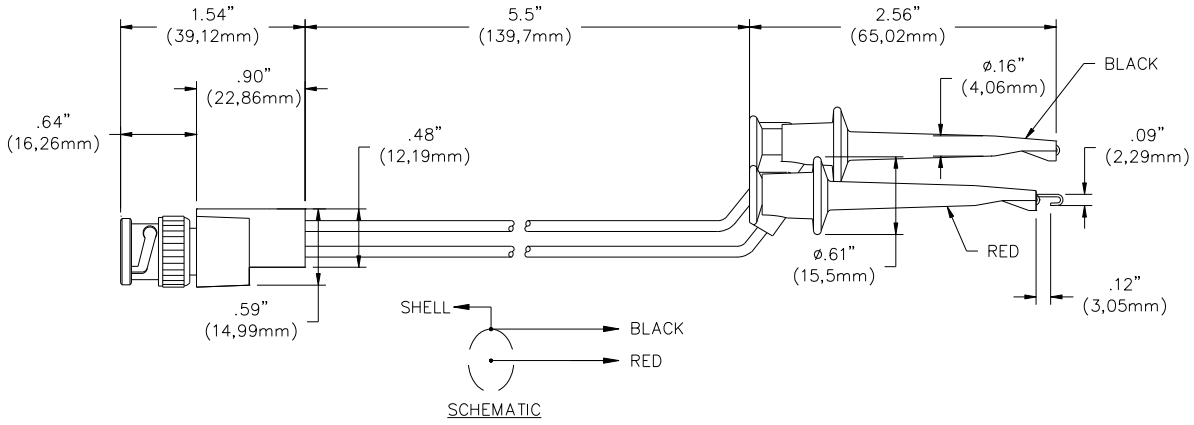

FEATURES:

- Minigrabber® test clip hooks attach to terminal sizes up to .060" diameter
- Converts BNC (Female) jacks to Minigrabber test clips for test versatility
- BNC connector and Minigrabber test clip caps are molded directly onto the wire for pull strength durability and dust and moisture resistance
- Grabber hook and BNC center contact are Gold-plated Beryllium Copper for optimum strength, excellent corrosion resistance and low contact resistance to ensure test signal integrity
- Schematic: Black Minigrabber test clip to BNC shell, red Minigrabber test clip to BNC center contact

MATERIALS:

BNC: Nickel plated brass
Center Contact: Gold-plated brass
Insulation: polypropylene molded to BNC and wire
Wire: 20 AWG, PVC
Marking: "POMONA 3789"
Minigrabber® test clip:
Contact: Gold-plated Beryllium Copper,
Insulation: Glass filled nylon, color: red and black
Marking: "Pomona Electronics", "Minigrabber®"

RATINGS:

Operating Temperature: +55°C (+131°F) Max.
Operating Voltage: Hand-held testing: 30VAC/60VDC Max.
Hands free testing in controlled voltage environments: 300VRMS Max.
ORDERING INFORMATION: **Model 3789**
*Custom lengths are available, contact Pomona Technical support: 800-241-2060 (Technicalsupport@pomonatest.com)

All dimensions are in inches. Tolerances (except noted): .xx = ±.02" (,51 mm), .xxx = ± .005" (,127 mm).
All specifications are to the latest revisions. Specifications are subject to change without notice.
Registered trademarks are the property of their respective companies.

Sales: 800-490-2361 Fax: 888-403-3360 Technical Assistance: 800-241-2060
For "Where to Buy" information, visit the Pomona web site at www.pomonaelectronics.com