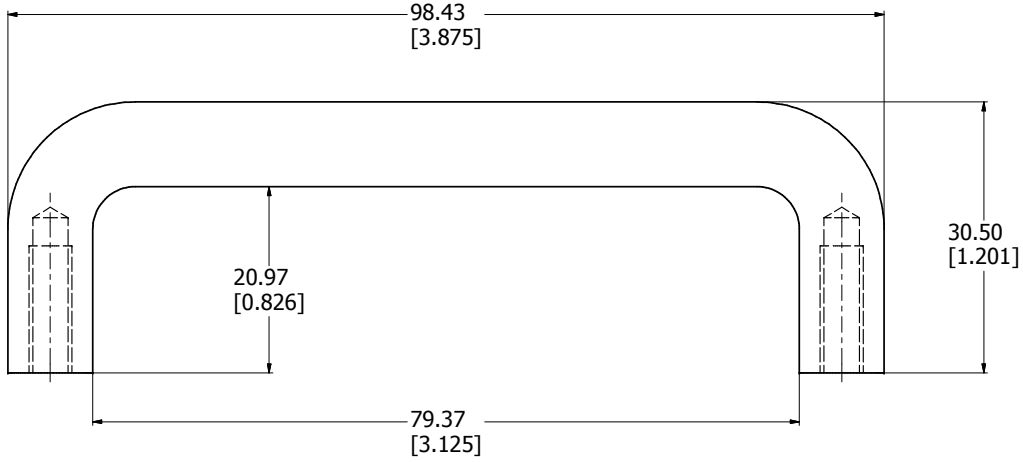

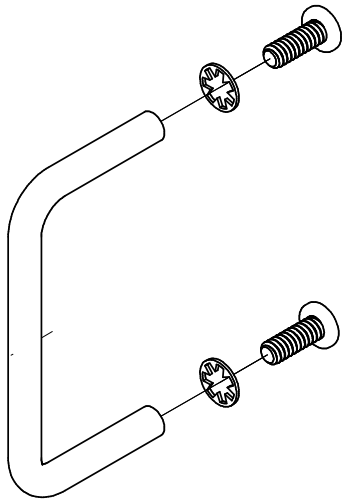

TYPICAL HANDLE ASSEMBLY

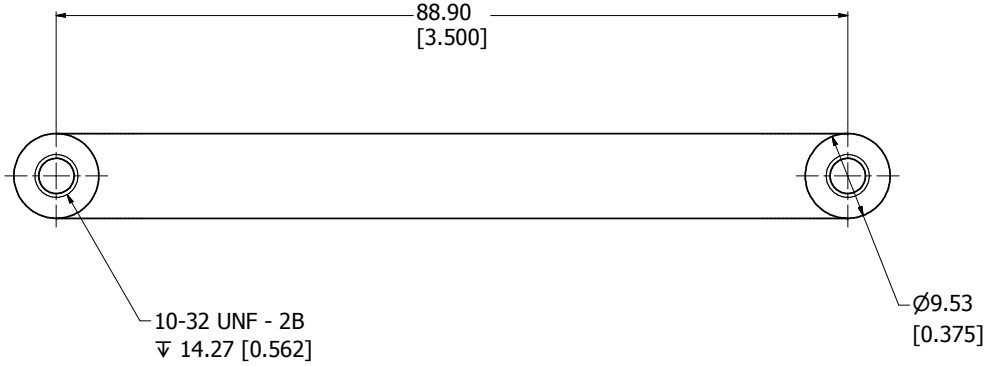

1427N
Handle Material - CR Steel
Finish - Bright Chrome Plated (1427N)
- E-Black Coating (1427N1BK)
Hardware
2 Screws - Panhead 10-32 x 1/2"
2 Internal Tooth Lockwashers
**note handle sold singly

HAMMOND MANUFACTURING™

1427N***