Hour meters / timers, electromechanical

Timers with DIN dimensions | **DIN counters for panel mount, 48 x 24 mm (AC+DC)** | **H37**



The hour meters H37 feature a very high shock resistance.

These panel mount counters with standard DIN dimensions can be used in many different fields of application.
These non-resettable counters are extremely tamper-proof.

5 Jahre / years Gewährleistung / warranty
Made in Germany by Kübler

Characteristics

- 7- or 8-digit hour meter.
- Without reset, high shock resistance.
- Small dimensions, magnified large figures.
- Protection IP65 on the font side.
- Panel mount counter with integrated spring clip (H37.4).
- UL-approved.

Benefits

- 5 years guarantee. [1)]
- High reliability: for a better sale of your final product.
- Data retention in case of power failure.
- Long service life.

Applications

General time measurement, maintenance intervals for measuring instruments (respiration units, oxygen, dialysis), small appliances, UV lamps, display panels in vehicles.

Type series

Description	*Mounting*	*Panel cut-out*	*Type*
Standard DIN counter for panel mount	mounting clip, on rear	45 x 22 [1.77 x 0.91“]	**H37**
Standard DIN counter for panel mount	2 mounting holes	50 x 25 [1.97 x 0.98“]	**H37.1**
Standard DIN counter for panel mount	mounting clip, on rear	50 x 25 [1.97 x 0.98“]	**H37.2**
Standard DIN counter for panel mount	mounting clip, on rear	45 x 22 [1.77 x 0.91“]	**H37.5**

Dual function timer
48 x 48 mm [1.89 x 1.89“] on request



1) When used as specified in the technical data

© Fritz Kübler GmbH, subject to errors and changes. 03/2023

Timers with DIN dimensions | DIN counters for panel mount, 48 x 24 mm (AC+DC) | H37

Accessories / Mounting examples

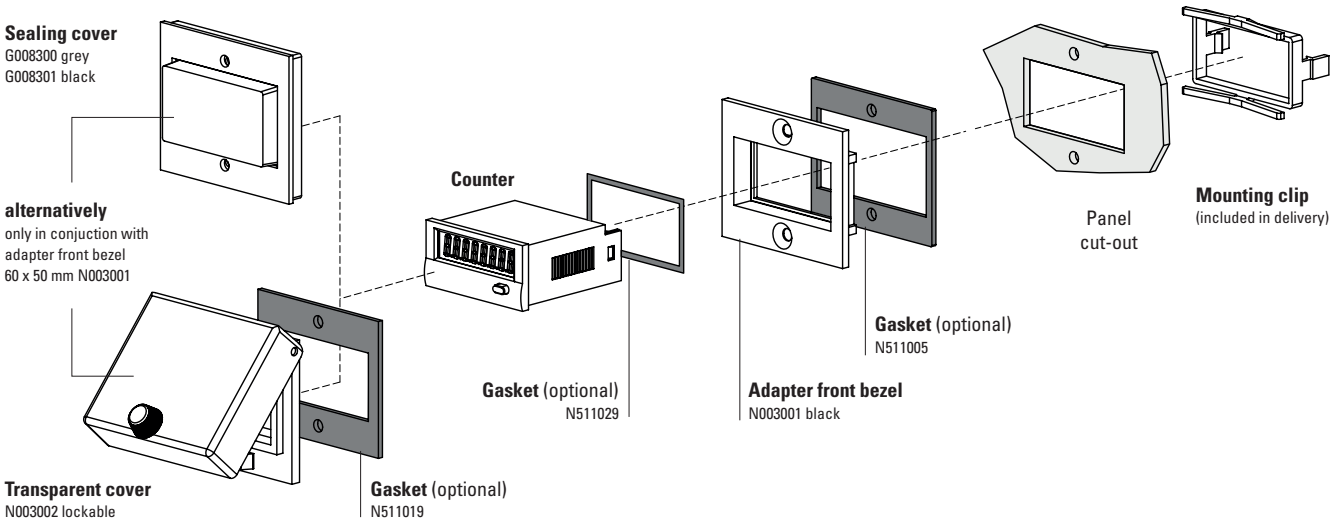

		Type / size	Description		Order no.	suitable gasket
Adapter front bezel (only for H37 + H37.5)		**53 x 28 mm [2.09 x 1.10“]**	for cut-out 50 x 25 mm [1.97 x 0.98“] to cut-out 45 x 22.2 mm [1.77 x 0.94“]	grey black anthracite	**T008164** **T008165** **T008180**	**N511015**
		**56 x 40 mm [2.20 x 1.57“]**	for cut-out 50 x 25 mm [1.97 x 0.98“] to cut-out 45 x 22.2 mm [1.77 x 0.94“] screw mounting	black anthracite	**T008161** **T008181**	**N511045**
		**72 x 36 mm [2.83 x 1.42“]**	for cut-out 68 x 33 mm [2.68 x 1.30“] to cut-out 45 x 22.2 mm [1.77 x 0.94“]	black and silver anodised as set	**162704Set**	–
		**60 x 50 mm [2.36 x 1.97“]**	for cut-out 54 x 29 mm [2.13 x 1.14“] to cut-out 45 x 22.2 mm [1.77 x 0.94“] screw mounting	black	**N003001**	**N511005**
		**48 x 48 mm [1.89 x 1.89“]**	for cut-out 45 x 45 mm [1.77 x 1.77“] to cut-out 45 x 22.2 mm [1.77 x 0.94“]	black	**T008883**	–
Sealing cover IP65 (only for H37 + H37.5)		**K1**	only in conjuction with adapter front bezel 60 x 50 mm N003001	transparent / grey transparent / black	**G008300** **G008301**	–
Transparent cover IP65 (only for H37 + H37.5)		**1 Dv** (mounted on bezel)	cover lockable, for cut-out 54 x 29 mm [2.13 x 1.14“], only in conjuction with adapter front bezel 60 x 50 mm N003001	transparent / black	**N003002**	**N511019**
Gasket counter			48 x 24 mm (for installation in adapter front bezel) 49 x 25 mm 53 x 28 mm	H37 + H37.5 H37 + H37.5 H37.2	**N511029** **N511034** **N511015**	
Mounting frame (only for H37 + H37.5)		**cut-out 50 x 25 mm [1.97 x 0.98“]**	via adapter T008180 for snap-on mounting on 35 mm [1.38“] top-hat DIN rail	chromated	**G300004**	–
Terminal cover		**KA 37**	2-pcs. per counter required	transparent	**T051687**	–

© Fritz Kübler GmbH, subject to errors and changes. 03/2023

Timers with DIN dimensions | DIN counters for panel mount, 48 x 24 mm (AC+DC) | H37

Technical data

Electrical connection		screw terminals (tightening torque max. 0.8 Nm)
Power consumption	10 ... 30 V DC	approx. 500 mW
	36 ... 80 V DC	approx. 900 mW
	100 ... 130 V DC	approx. 750 mW
	20 ... 30 V AC, 50 Hz	approx. 0.3 VA
	42 ... 48 V AC , 50 Hz	approx. 0.25 VA
	100 ... 130 V AC, 50 Hz	approx. 0.6 VA
	187 ... 264 V AC, 50 Hz	approx. 1.2 VA
Rated voltages	AC (50 or 60 Hz)	20 ... 30 V, 42 ... 48 V, 100 ... 130 V, 187 ... 264 V
	DC	10 ... 30 V, 36 ... 80 V, 100 ... 130 V
On time		100 %
Number of digits	AC	7 – 99999.99 h
	DC	8 – 999999.99 h
Resolution		0.01 h equals 36 s
Height of figures		4 mm [0.16“]
Color of figures		white and red on black
Reset		no reset
Operating temperature		-15 °C ... +50 °C [+5 °F ... +122 °F] (non-condensing)
Storage temperature		-40 °C ... +85 °C [-40 °F ... +185 °F]
Relative humidity at +30 °C [+86 °F]		≤ 80 % (non-condensing)
Altitude		up to 2000 m [6562’]
Mounting position		any
Protection		IP65 (front side) built in with gasket, (order gasket separately)
Device safety	designed to	EN 61010 part 1
	protection class	2
	application area	pollution level 2
Housing		plastic PC (Polycarbonate) types with IP65 protection are sealed (potted)
Accuracy	AC	supply frequency + 30 ms
	DC	< 0.003 % (at 24 h)
Weight	H37	approx. 50 g [1.76 oz]
	slip on bezel 37.1	6 g [0.21 oz]
	slip on bezel 37.2	2 g [0.07 oz]

Options

Housing color	grey	Art. no. 3.130.X50.XXX
Electrical connection		
	flat pin 0.8 x 6.3 mm [0.031 x 0.25“]	Art.-No.: 3.24X.20X.XXX.011
	screw terminal with terminal cover	Art.-No.: 3.24X.20X.XXX.456
	spring-type terminal	on request
360 - 440 V AC		on request

Approvals

UL compliant in accordance with	File no. E128604
CE compliant in accordance with	
EMC Directive	2014/30/EU
RoHS Directive	2011/65/EU
Low Voltage Directive	2014/35/EU
UKCA compliant in accordance with	
EMC Regulations	S.I. 2016/1091
RoHS Regulations	S.I. 2012/3032
Low Voltage Regulations	S.I. 2016/1101

© Fritz Kübler GmbH, subject to errors and changes. 03/2023

Timers with DIN dimensions | DIN counters for panel mount, 48 x 24 mm (AC+DC) | H37

Mounting clip, on rear, panel mount dimensions 45 x 22 [1.77 x 0.91]
Type H37



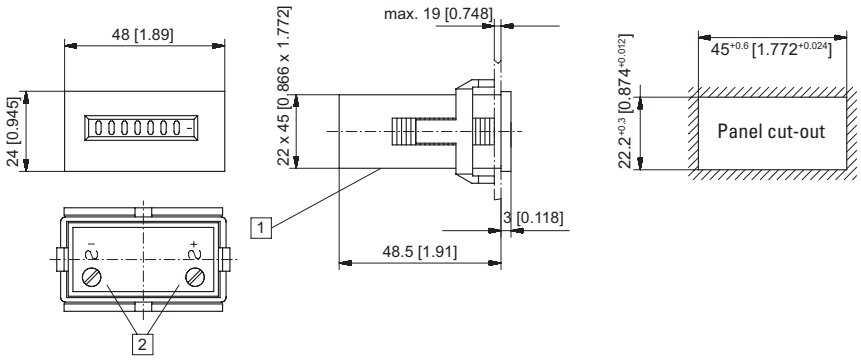

1 Wire entry 2 Screw terminal with flat pin 0.8 x 6.3 [0.031 x 0.25]

Type	Display	Voltage	Art. no. 10 ... 30 V	20 ... 30 V	36 ... 80 V	42 ... 48 V	100 ... 130 V	187 ... 264 V
H37	7 digits	AC (50 Hz)		**3.240.201.071**		**3.240.201.072**	**3.240.201.074** 1)	**3.240.201.075** 1)
	7 digits	AC (60 Hz)		**3.240.201.081**		**3.240.201.082**	**3.240.201.084**	**3.240.201.085**
	8 digits	DC	**3.240.201.351** 1)		**3.240.201.353**		**3.240.201.381**	

2 mounting holes, panel mount dimensions 50 x 25 [1.97 x 0.98"]
Type H37.1



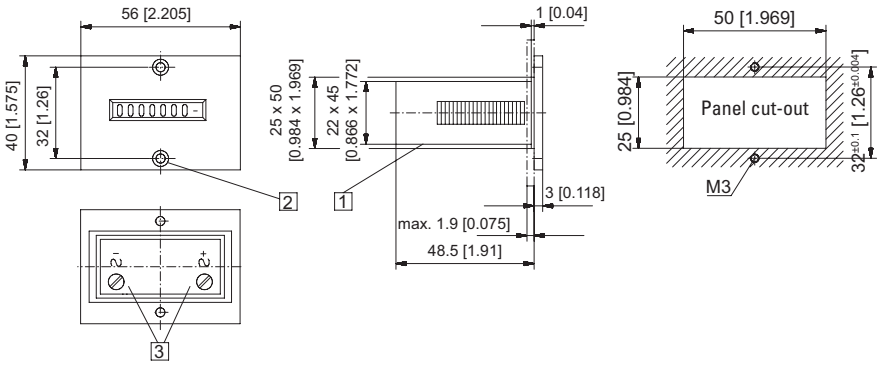

1 Wire entry 2 Countersinking Af3, DIN 74 3 Screw terminal with flat pin 0.8 x 6.3 [0.031 x 0.25]

Type	Display	Voltage	Art. no. 10 ... 30 V	20 ... 30 V	36 ... 80 V	42 ... 48 V	100 ... 130 V	187 ... 264 V
H37.1	7 digits	AC (50 Hz)		**3.241.201.071**		**3.241.201.072**	**3.241.201.074**	**3.241.201.075**
	7 digits	AC (60 Hz)		**3.241.201.081**		**3.241.201.082**	**3.241.201.084**	**3.241.201.085**
	8 digits	DC	**3.241.201.351** 1)		**3.241.201.353**		**3.241.201.381**	

Mounting clip, on rear, panel mount dimensions 50 x 25 [1.97 x 0.98"]
Type H37.2



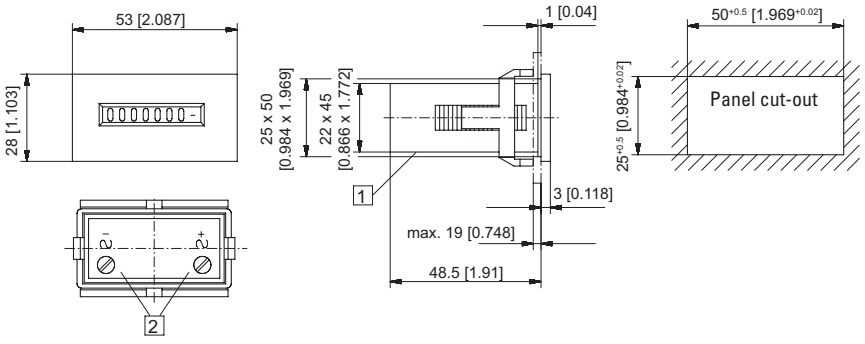

1 Wire entry 2 Screw terminal with flat pin 0.8 x 6.3 [0.031 x 0.25]

Type	Display	Voltage	Art. no. 10 ... 30 V	20 ... 30 V	36 ... 80 V	42 ... 48 V	100 ... 130 V	187 ... 264 V
H37.2	7 digits	AC (50 Hz)		**3.242.201.071**		**3.242.201.072**	**3.242.201.074**	**3.242.201.075** 1)
	7 digits	AC (60 Hz)		**3.242.201.081**		**3.242.201.082**	**3.242.201.084**	**3.242.201.085**
	8 digits	DC	**3.242.201.351** 1)		**3.242.201.353**		**3.242.201.381**	

Dimensions in mm [inch]

1) Stock types

© Fritz Kübler GmbH, subject to errors and changes. 03/2023

Timers with DIN dimensions | DIN counters for panel mount, 48 x 24 mm (AC+DC) | H37

DIN counter for panel mount
mounting clip, on rear,
panel mount dimensions 45 x 22 [1.77 x 0.91]
Type H37.5



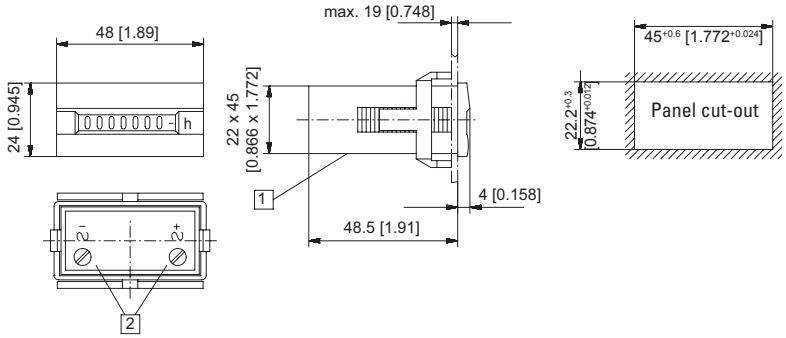

1 Wire entry 2 Screw terminal with flat pin 0.8 x 6.3 [0.031 x 0.25]

Type	Display	Voltage	Art. no. 10 ... 30 V	20 ... 30 V	36 ... 80 V	42 ... 48 V	100 ... 130 V	187 ... 264 V	
H37.5	7 digits	AC (50 Hz)		**3.245.201.071**		**3.245.201.072**	**3.245.201.074**	**3.245.201.075** [1)]	
	7 digits	AC (60 Hz)		**3.245.201.081**		**3.245.201.082**	**3.245.201.084**	**3.245.201.085**	
	8 digits	DC	**3.245.201.351** [1)]		**3.245.201.353**		**3.245.201.381**		

Dimensions in mm [inch]

1) Stock types

© Fritz Kübler GmbH, subject to errors and changes. 03/2023