CONTROL No: 1335

REV	DATE	ECO	DESCRIPTION	BY	CK	APP
E	1-4-11	N/A	REMOVED DIM. TOLERANCES	LDB	N/A	N/A

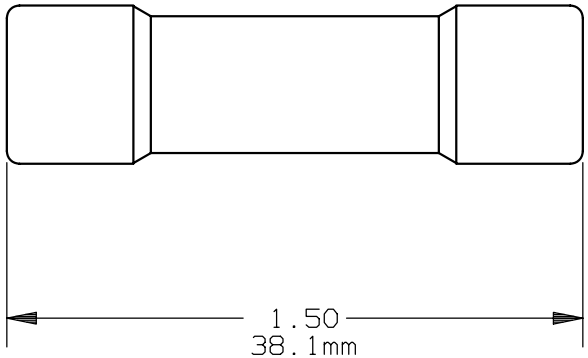

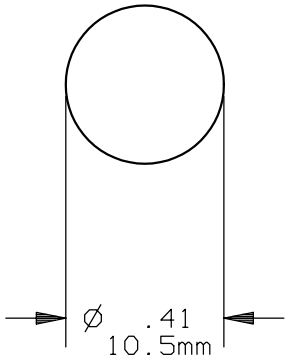

NOTES:

1. DIMENSIONS ARE IN $\frac{\text{INCH}}{\text{MILLIMETER}}$

MERSEN USA NEWBURYPORT-MA, LLC 374 MERRIMAC STREET NEWBURYPORT,MA 01950		ATM(1/10-30) FORM 600 MIDGET 1/10-30A. 600V PLATED TERMINALS	OUTLINE DIMENSIONS NOT TO BE USED FOR PRODUCTION
PRODUCT MANAGER SIGN: DATE:	DESIGN ENGINEER SIGN: DATE:		14050