THE INFORMATION CONTAINED IN THIS DRAWING IS THE SOLE PROPERTY OF L-COM, INC. ANY REPRODUCTION IN PART OR WHOLE WITHOUT THE WRITTEN PERMISSION OF L-COM, INC. IS PROHIBITED.

REVISIONS

REV	DESCRIPTION	DATE	APPROVED
A	RELEASED FOR PRODUCTION	05/10/01	MCCORMICK
B	REVISED TOLERANCES PER ECN 1489	08/08/03	MCCORMICK
C	ECN 3112: UPDATE DWG FORMAT	12/13/07	D.GRIFFIN
D	ECN 4179: ADDED VOLTAGE RATING, CN RELEASE, NEW FORMAT	8/12/09	D.FRISIELLO

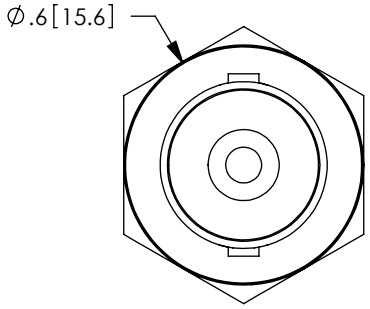

2X BNC JACK

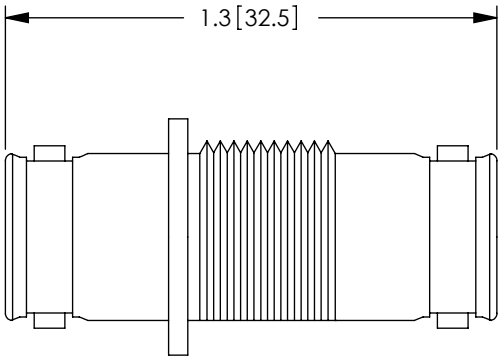

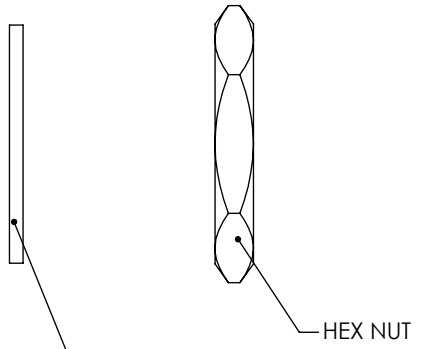

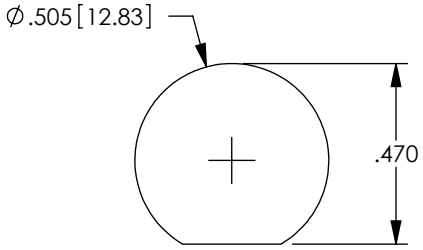

RECOMMENDED PANEL OPENING

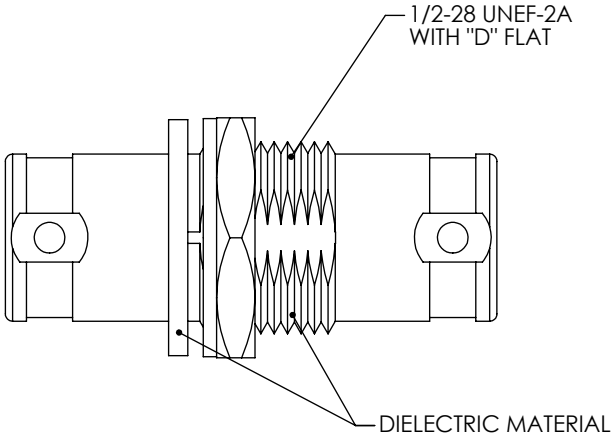

SPECIFICATIONS;

MATERIALS;
SHELL: BRASS
CONTACTS: BRASS
INSULATOR: TEFLON

FINISH;
CONTACT: GOLD

ELECTRICAL;
CHARACTERISTIC IMPEDANCE: 50 OHMS
VOLTAGE RATING: 36V

PACKAGING:
COMPONENT SHALL BE INDIVIDUALLY PACKAGED IN ACCORDANCE WITH L-COM SPECIFICATION PS-0031.

RoHS Compliant ✔

UNLESS OTHERWISE SPECIFIED,
DIMENSIONS ARE IN INCHES [mm]
DIMENSIONAL TOLERANCES:
.X = ±.1
.XX = ±.01
.XXX = ±.005
ANGULAR TOLERANCES:
ALL = ± 1°
PROJECTION

APPROVALS	DATE
DRAWN BY RON CARRICK	4/3/2001
CHECKED BY MCCORMICK	05/10/01
APPROVED BY D.PARHAM	05/10/01

CONFIGURATION DETAILS OF UNDIMENSIONED FEATURES MAY VARY

COLOR VARIATIONS MAY OCCUR

REF

L-COM Global Connectivity
45 BEECHWOOD DRIVE
NORTH ANDOVER, MA
01845

CATEGORY
COAXIAL

PRODUCT DESCRIPTION
BNC JACK FEED-THRU ADAPTOR (INSULATED)

SIZE	FSCM NO.	DWG. NO.	REV.
A	43321	BA1089	D

SCALE: NONE | CAD FILE: BA1089.SLDDRW | SHEET 1 OF 1