PN2670

Pressure sensor with display

PN-400-SEN14-MFRKG/US/ /V

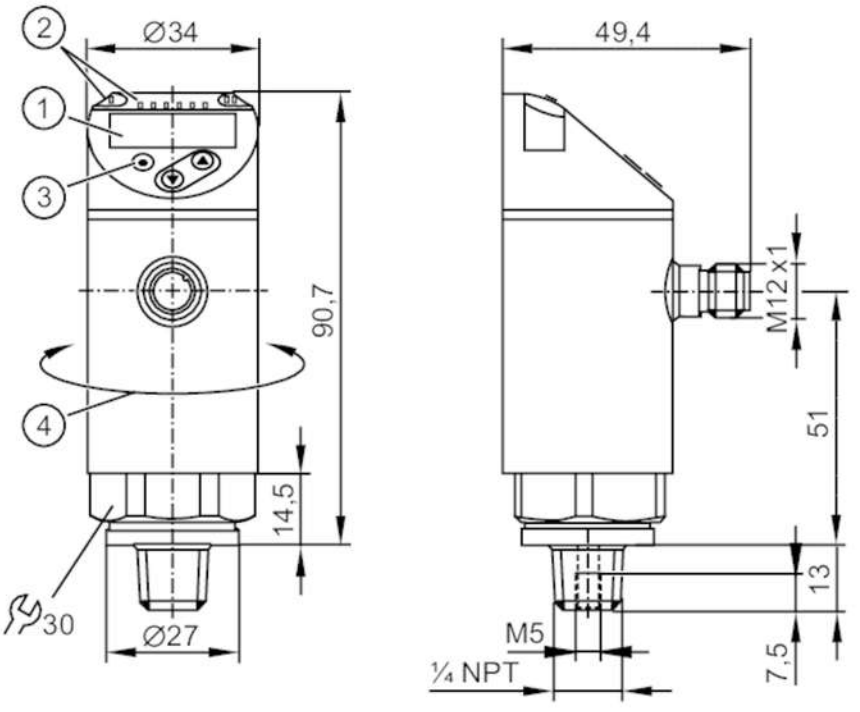

1 alphanumeric display 4-digit red/green
2 LEDs Display unit / switching status
3 programming button
4 upper part of the housing can be rotated 345°

Product characteristics			
Number of inputs and outputs	Number of digital outputs: 2; Number of analogue outputs: 1		
Measuring range	0...400 bar	0...5800 psi	0...40 MPa
Process connection	threaded connection 1/4" NPT external thread		
Application			
Special feature	Gold-plated contacts		
Measuring element	metallic thin film cell		
Application	for industrial applications		
Media	liquids and gases		
Medium temperature [°C]	-25...80		
Min. bursting pressure	1700 bar	24650 psi	170 MPa
Pressure rating	800 bar	11580 psi	80 MPa
Vacuum resistance [mbar]	-1000		
Vacuum resistance [MPa]	-0.1		
Type of pressure	relative pressure		
MAWP (for applications according to CRN)	800 bar	11580 psi	80 MPa
Electrical data			
Operating voltage [V]	18...30 DC; (to SELV/PELV)		
Current consumption [mA]	< 35		
Min. insulation resistance [MΩ]	100; (500 V DC)		

PN2670

Pressure sensor with display

PN-400-SEN14-MFRKG/US/ /V

Protection class		III		
Reverse polarity protection		yes		
Power-on delay time	[s]	0.3		
Integrated watchdog		yes		
Inputs / outputs				
Number of inputs and outputs		Number of digital outputs: 2; Number of analogue outputs: 1		
Outputs				
Total number of outputs		2		
Output signal		switching signal; analogue signal; IO-Link; (configurable)		
Electrical design		PNP/NPN		
Number of digital outputs		2		
Output function		normally open / normally closed; (parameterisable)		
Max. voltage drop switching output DC	[V]	2		
Permanent current rating of switching output DC	[mA]	250		
Switching frequency DC	[Hz]	< 500		
Number of analogue outputs		1		
Analogue current output	[mA]	4...20; (scalable 1:5)		
Max. load	[Ω]	500		
Analogue voltage output	[V]	0...10; (scalable 1:5)		
Min. load resistance	[Ω]	2000		
Short-circuit protection		yes		
Type of short-circuit protection		pulsed		
Overload protection		yes		
Measuring/setting range				
Measuring range		0...400 bar	0...5800 psi	0...40 MPa
Analogue start point		0...320 bar	0...4640 psi	0...32 MPa
Analogue end point		80...400 bar	1160...5800 psi	8...40 MPa
Factory setting / CMPT = 2				
Set point SP		2.5...400 bar	40...5800 psi	0.25...40 MPa
Reset point rP		1...398.5 bar	10...5780 psi	0.1...39.85 MPa
Min. difference between SP and rP		2 bar	30 psi	0.2 MPa
In steps of		0.5 bar	10 psi	0.05 MPa
Status_B High Resolution / CMPT = 3				
Set point SP		2.5...400 bar	37...5802 psi	0.25...40 MPa
Reset point rP		0.9...398.4 bar	13...5778 psi	0.09...39.84 MPa
Min. difference between SP and rP		1.7 bar	24 psi	0.17 MPa
In steps of		0.1 bar	1 psi	0.01 MPa
Accuracy / deviations				
Switch point accuracy	[% of the span]	< ± 0,4; (Turn down 1:1)		
Repeatability	[% of the span]	< ± 0,1; (with temperature fluctuations < 10 K; Turn down 1:1)		

PN2670

Pressure sensor with display

PN-400-SEN14-MFRKG/US/ /V

Characteristics deviation [% of the span]		< ± 0,25 (BFSL) / < ± 0,5 (LS); (Turn down 1:1; BFSL = Best Fit Straight Line; LS = limit value setting)
Hysteresis deviation [% of the span]		< ± 0,1; (Turn down 1:1)
Long-term stability [% of the span]		< ± 0,05; (Turn down 1:1; per 6 months)
Temperature coefficient zero point [% of the span / 10 K]		0,2; (-25...80 °C)
Temperature coefficient span [% of the span / 10 K]		0,2; (-25...80 °C)
Notes on the accuracy / deviation		switch point accuracy, linearity error under DNV GL: < ± 1%: < ± 1%
Response times		
Response time	[ms]	< 1.5
Delay time programmable dS, dr	[s]	0...50
Damping process value dAP	[s]	0...4
Damping for the analogue output dAA	[s]	0...4
Max. response time analogue output	[ms]	3
Software / programming		
Parameter setting options		hysteresis / window; normally open / normally closed; switch-on/ switch-off delay; Damping; Display unit; current/voltage output
Interfaces		
Communication interface		IO-Link
Transmission type		COM2 (38,4 kBaud)
IO-Link revision		1.1
SDCI standard		IEC 61131-9
SIO mode		yes
Required master port type		A; (when pin 2 not connected: B)
Supported DeviceIDs		**Type of operation** / **DeviceID** Factory setting / CMPT = 2 / 459 Status_B High Resolution / CMPT = 3 / 638
Note		For further information please see the IODD PDF file under "Downloads"
Factory setting / CMPT = 2		
Profiles		Smart Sensor: Process Data Variable; Device Identification, Device Diagnosis
Min. process cycle time	[ms]	2.3
IO-Link resolution pressure	[bar]	0.1
IO-Link process data (cyclical)		**function** / **bit length** pressure / 14 binary switching information / 2
IO-Link functions (acyclical)		application specific tag
Status_B High Resolution / CMPT = 3		
Profiles		Smart Sensor ED2: Digital Measuring Sensor (0x000A), Identification and Diagnosis (0x4000)

PN2670

Pressure sensor with display

PN-400-SEN14-MFRKG/US/ /V

Min. process cycle time	[ms]	3	
IO-Link resolution pressure	[bar]	0.2	
IO-Link process data (cyclical)		**function**	**bit length**
		pressure	16
		device status	4
		binary switching information	2
IO-Link functions (acyclical)		application specific tag	

Operating conditions

Ambient temperature	[°C]	-25...80	
Storage temperature	[°C]	-40...100	
Protection		IP 65; IP 67	

Tests / approvals

EMC		DIN EN 61000-6-2	
		DIN EN 61000-6-3	
Shock resistance		DIN EN 60068-2-27	50 g (11 ms)
Vibration resistance		DIN EN 60068-2-6	20 g (10...2000 Hz)
MTTF	[years]	129	
UL approval		UL Approval no.	J014
Pressure Equipment Directive		Sound engineering practice; can be used for group 2 fluids; group 1 fluids on request	

Mechanical data

Weight	[g]	242.5
Housing		cylindrical
Dimensions	[mm]	Ø 34 / L = 90.7
Materials		stainless steel (630/1.4542/17-4 PH); stainless steel (316L/1.4404); PBT+PC-GF30; PBT-GF20; PC
Materials (wetted parts)		stainless steel (630/1.4542/17-4 PH)
Min. pressure cycles		100 million
Tightening torque	[Nm]	> 50; (depends on lubrication, seal and pressure rating)
Process connection		threaded connection 1/4" NPT external thread
Restrictor element integrated		no (can be retrofitted)

Displays / operating elements

Display	Display unit	3 x LED, green (bar, psi, MPa)
	switching status	2 x LED, yellow
	measured values	alphanumeric display, red/green 4-digit

Remarks

Pack quantity	1 pcs.

Electrical connection

Connector: 1 x M12; coding: A; Contacts: gold-plated

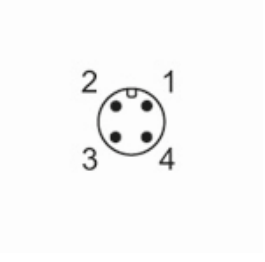

PN2670

Pressure sensor with display

PN-400-SEN14-MFRKG/US/ /V

Connection

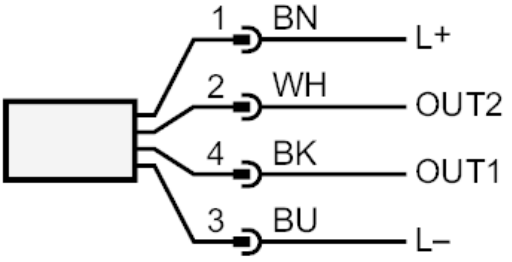

OUT1	switching output IO-Link
OUT2	switching output analogue output
	Core colours :
BK =	black
BN =	brown
BU =	blue
WH =	white