PY2209

Pressure sensor with display

PN-1-1BRBN14-MFRKG/US/ /V

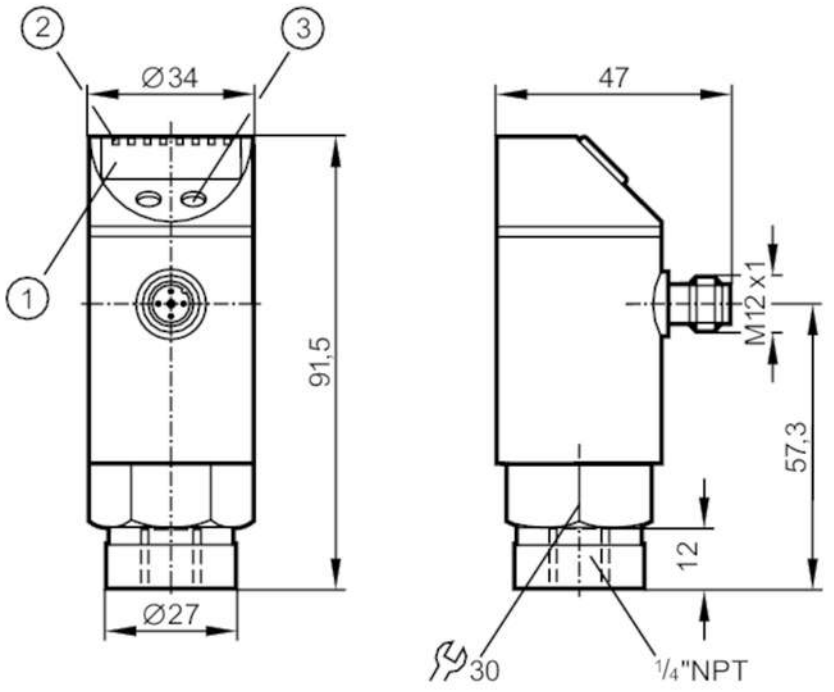

1 alphanumeric display 4-digit
2 LEDs Display unit / switching status
3 programming button

Product characteristics			
Number of inputs and outputs		Number of digital outputs: 2; Number of analogue outputs: 1	
Measuring range	[psi]	-15...15	
Process connection		threaded connection 1/4" NPT internal thread	
Application			
Special feature		Gold-plated contacts	
Application		for industrial applications	
Media		liquids and gases	
Medium temperature	[°C]	-25...80	
Min. bursting pressure		725 psi	5 MPa
Pressure rating		290 psi	2 MPa
Type of pressure		relative pressure	
Electrical data			
Operating voltage	[V]	18...32 DC; (to SELV/PELV)	
Current consumption	[mA]	< 35	
Min. insulation resistance	[MΩ]	100; (500 V DC)	
Protection class		III	
Reverse polarity protection		yes	
Power-on delay time	[s]	0.3	
Integrated watchdog		yes	

PY2209

Pressure sensor with display

PN-1-1BRBN14-MFRKG/US/ /V

Inputs / outputs			
Number of inputs and outputs		Number of digital outputs: 2; Number of analogue outputs: 1	
Outputs			
Total number of outputs		2	
Output signal		switching signal; analogue signal; (configurable)	
Electrical design		PNP/NPN	
Number of digital outputs		2	
Output function		normally open / normally closed; (parameterisable)	
Max. voltage drop switching output DC	[V]	2	
Permanent current rating of switching output DC	[mA]	250	
Switching frequency DC	[Hz]	< 500	
Number of analogue outputs		1	
Analogue current output	[mA]	4...20; (scalable 1:4)	
Max. load	[Ω]	(Ub - 10 V) / 20 mA	
Analogue voltage output	[V]	0...10; (scalable 1:4)	
Min. load resistance	[Ω]	2000	
Short-circuit protection		yes	
Type of short-circuit protection		pulsed	
Overload protection		yes	
Measuring/setting range			
Measuring range	[psi]	-15...15	
Set point SP	[psi]	-14.8...15	
Reset point rP	[psi]	-14.9...14.9	
Analogue start point	[psi]	-15...7.5	
Analogue end point	[psi]	-7.5...15	
In steps of	[psi]	0.1	
Factory setting		SP1 = -7.5 psi	rP1 = -8.1 psi
		SP2 = 7.5 psi	rP2 = 6.9 psi
		ASP = -15 psi	AEP = 15 psi
Accuracy / deviations			
Switch point accuracy	[% of the span]	< ± 0,4; (Turn down 1:1)	
Repeatability	[% of the span]	< ± 0,1; (with temperature fluctuations < 10 K; Turn down 1:1)	
Characteristics deviation	[% of the span]	< ± 0,25 (BFSL) / < ± 0,5 (LS); (Turn down 1:1; BFSL = Best Fit Straight Line; LS = limit value setting)	
Hysteresis deviation	[% of the span]	< ± 0,1; (Turn down 1:1)	
Long-term stability	[% of the span]	< ± 0,1; (Turn down 1:1; per year)	
Temperature coefficient zero point	[% of the span / 10 K]	< ± 0,2; (-25...80 °C)	
Temperature coefficient span		< ± 0,2; (-25...80 °C)	

PY2209

Pressure sensor with display

PN-1-1BRBN14-MFRKG/US/ /V

[% of the span / 10 K]			
Response times			
Response time	[ms]	< 1.5	
Damping process value dAP	[s]	0.01...4	
Damping for the analogue output dAA	[s]	0.01...4	
Max. response time analogue output	[ms]	3	
Software / programming			
Parameter setting options		hysteresis / window; normally open / normally closed; switching logic; current/voltage output; Damping; adaptation of displayed values; display can be rotated and switched off; Display unit; zero point; span	
Operating conditions			
Ambient temperature	[°C]	-25...80	
Storage temperature	[°C]	-40...100	
Protection		IP 65	
Tests / approvals			
EMC		DIN EN 61000-6-2	
		DIN EN 61000-6-3	
Shock resistance		DIN EN 60068-2-27	50 g (11 ms)
Vibration resistance		DIN EN 60068-2-6	20 g (10...2000 Hz)
MTTF	[years]	167.14	
Pressure Equipment Directive		Sound engineering practice; can be used for group 2 fluids; group 1 fluids on request	
Mechanical data			
Weight	[g]	256.5	
Housing		cylindrical	
Dimensions	[mm]	Ø 34 / L = 91.5	
Materials		stainless steel (304/1.4301); stainless steel (316L/1.4404); PC; PBT; PEI; FKM; PTFE	
Materials (wetted parts)		stainless steel (303/1.4305); ceramics; FKM	
Min. pressure cycles		100 million	
Process connection		threaded connection 1/4" NPT internal thread	
Restrictor element integrated		no (can be retrofitted)	
Displays / operating elements			
Display		Display unit	3 x LED, green
		switching status	2 x LED, yellow
		function display	alphanumeric display, 4-digit
		measured values	alphanumeric display, 4-digit
Display unit		mbar; kPa; psi; inH2O; inHg	
Remarks			
Pack quantity		1 pcs.	

PY2209

Pressure sensor with display

PN-1-1BRBN14-MFRKG/US/ /V

Electrical connection

Connector: 1 x M12; coding: A; Contacts: gold-plated

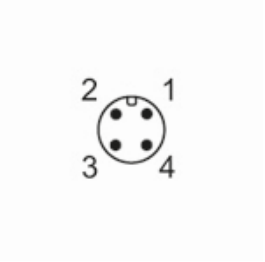

Connection

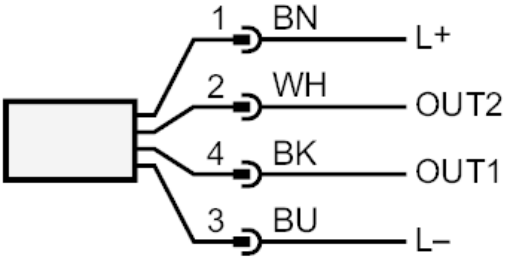

OUT1	switching output
OUT2	switching output analogue output
	Core colours :
BK =	black
BN =	brown
BU =	blue
WH =	white