Technical data sheet · Load monitoring



LOCC Box load protection

Identification	Type	LOCC-Box-SC 7-6408
	Part-No.	716408

Description	
	Electronic load monitoring up to DC 5 A
	Single-channel design, Adjustable current range: DC 1 A – 5 A
	Adjustable characteristics, fast, medium-speed, slow 1

Input	
Nominal voltage	DC 12 / 24 V
Operation voltage range	DC 10 V – 32 V
Rated current	DC 5 A
Supply current	DC 40 A over Cu-rails 10 × 3 mm
Reverse voltage protection	internal electronics
Termination	screwless disconnect slide

Control input (Set / Reset)	
Signal level	DC 12 / 24 V (EN 61131)
OFF	Pulse with falling edge >100 ms, <800 ms
ON	Pulse with falling edge > 1 s
Connection	Spring terminal 0.25–2.5 mm^2

Load Side

USA: LUTZE INC.
13330 South Ridge Drive • Charlotte, NC 28273, USA
Tel. +1 (704) 504-0222 • Fax +1 (704) 504-0223
www.lutze.com • info@lutze.com

United Kingdom: LÜTZE Ltd.
Unit 3, Sandy Hill Park
Sandy Way, Amington • GB-Tamworth, Staffs B77 4DU
Tel. +44 (0)1827 31333-0 • Fax +44 (0)1827 31333-2
www.lutze.com • sales.gb@lutze.co.uk

SYSTEMATIC TECHNOLOGY

Switching element	MosFet
Output current	max. DC 5 A
Voltage drop	<85 mV (5 A)
Status Indication	LED green: Operating voltage present, no error LED red: Error in load circuit
Switch-on capacity	10000 µF
Current range	1 A – 5 A (adjustable via switch in 1 A steps)
Characteristic	fast-acting (1), medium-slow (2), slow 1 (3)

Signal output	
Signal level	DC 12/24 V: operating voltage on standby, no error, DC 0 V: error, output switched off and manual "OFF"
Switching element	Transistor, collector with pull-up resistance

General	
Operation temperature range	-25 °C – 50 °C
Storage temperature range	-40 °C – 85 °C
Dimensions (w × h × d)	8.1 × 114.5 × 116.0 mm
Housing material	PA 6.6 (UL 94-V0; NFF I2, F2)
Field installation	rail TS 35 (EN 50022)
Protection class	IP 20
Installation postition	Optional
Weight (kg/piece)	0.120
Termination	Spring terminal 0.25–2.5 mm^2
Approvals	cULus
Standards	EN 60950-1; EN 61131-1,2; EN 61000; EN 60947-4-1; EN 55022

USA: LUTZE INC.
13330 South Ridge Drive • Charlotte, NC 28273, USA
Tel. +1 (704) 504-0222 • Fax +1 (704) 504-0223
www.lutze.com • info@lutze.com

United Kingdom: LÜTZE Ltd.
Unit 3, Sandy Hill Park
Sandy Way, Amington • GB-Tamworth, Staffs B77 4DU
Tel. +44 (0)1827 31333-0 • Fax +44 (0)1827 31333-2
www.lutze.com • sales.gb@lutze.co.uk

LUTZE SYSTEMATIC TECHNOLOGY

Dimensions

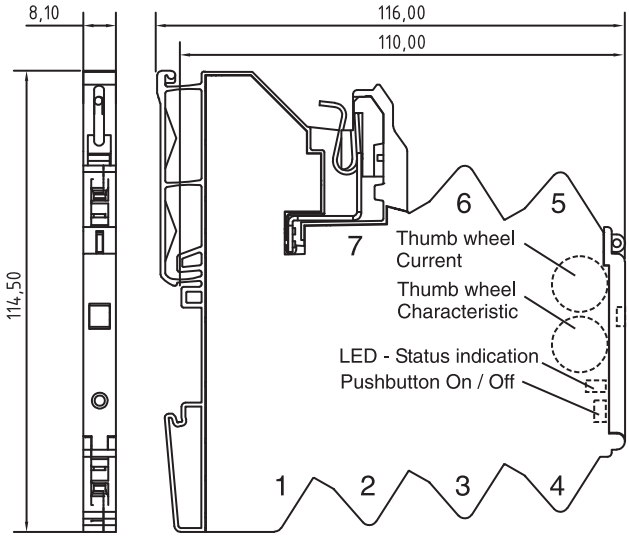

PIN assignment

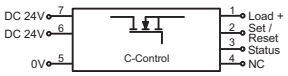

1: + Output
2: Control input (Set/Reset)
3: Status output
4: NC
5: 0V
6: + Supply (alternative)
7: + Supply

1: Characteristic fast

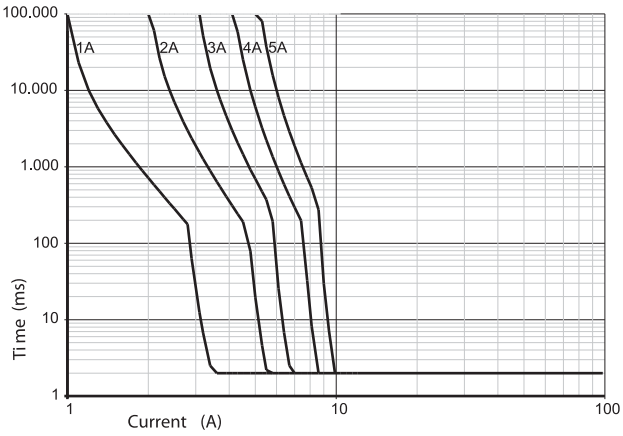

USA: LUTZE INC.
13330 South Ridge Drive • Charlotte, NC 28273, USA
Tel. +1 (704) 504-0222 • Fax +1 (704) 504-0223
www.lutze.com • info@lutze.com

United Kingdom: LÜTZE Ltd.
Unit 3, Sandy Hill Park
Sandy Way, Amington • GB-Tamworth, Staffs B77 4DU
Tel. +44 (0)1827 31333-0 • Fax +44 (0)1827 31333-2
www.lutze.com • sales.gb@lutze.co.uk

SYSTEMATIC TECHNOLOGY

2: Characteristic medium

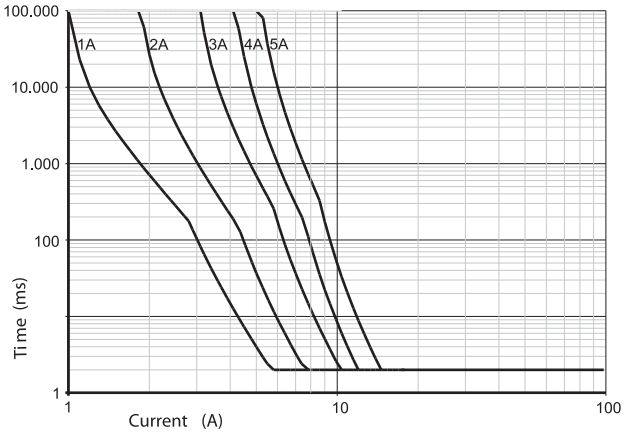

3: Characteristic slow-1

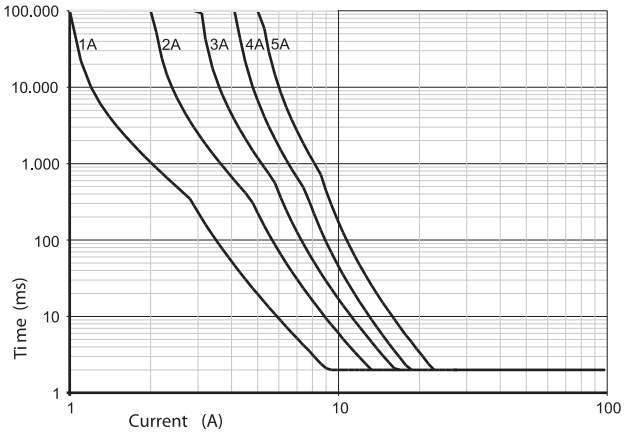

USA: LUTZE INC.
13330 South Ridge Drive • Charlotte, NC 28273, USA
Tel. +1 (704) 504-0222 • Fax +1 (704) 504-0223
www.lutze.com • info@lutze.com

United Kingdom: LÜTZE Ltd.
Unit 3, Sandy Hill Park
Sandy Way, Amington • GB-Tamworth, Staffs B77 4DU
Tel. +44 (0)1827 31333-0 • Fax +44 (0)1827 31333-2
www.lutze.com • sales.gb@lutze.co.uk

LUTZE SYSTEMATIC TECHNOLOGY

Signal output

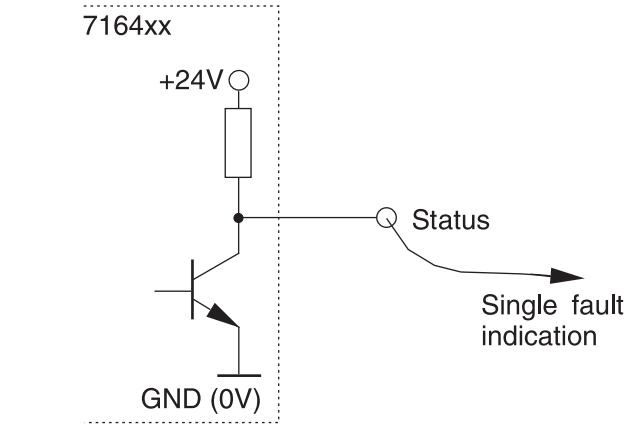

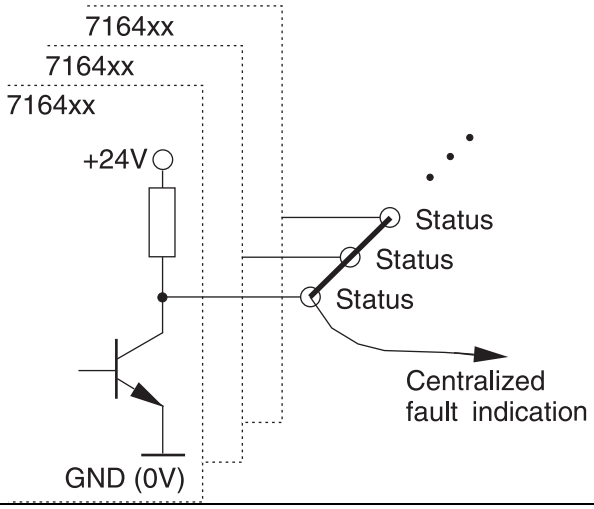

Accessories

USA: LUTZE INC.
13330 South Ridge Drive • Charlotte, NC 28273, USA
Tel. +1 (704) 504-0222 • Fax +1 (704) 504-0223
www.lutze.com • info@lutze.com

United Kingdom: LÜTZE Ltd.
Unit 3, Sandy Hill Park
Sandy Way, Amington • GB-Tamworth, Staffs B77 4DU
Tel. +44 (0)1827 31333-0 • Fax +44 (0)1827 31333-2
www.lutze.com • sales.gb@lutze.co.uk

SYSTEMATIC TECHNOLOGY

Accessories	Color	Article number	Type	PU
0 V collective terminal		716420	LOCC Box-SK 7-6420	2
Supply terminal with cutout for copper rail to increase current		716421	LOCC Box-EKL 7-6421	2
Distance terminal without contact		716422	LOCC Box-DKL 7-6422	2
LOCC Box empty housing without terminal		716424	LOCC Box-DY 7-6424	2
Supply kit (supply and end terminals)		716425	LOCC Box ES 7-6425	1
Jumper comb, 8-pin, 6 A	white	716428	LOCC Box BKW 7-6428	5
Jumper comb, 8-pin, 6 A	red	716429	LOCC Box BKR 7-6429	5
Jumper comb, 8-pin, 6 A	blue	716430	LOCC Box BKB 7-6430	5
Jumper comb, 16-pin, 6 A	white	716438	LOCC Box BKW 7-6438	5
Jumper comb, 16-pin, 6 A	red	716439	LOCC Box BKB 7-6440	5
Jumper comb, 16-pin, 6 A	blue	716440	LOCC Box BKR 7-6439	5
Tag holder (quantity 200)	white (5×5 mm)	716431	LOCC Box BZW 7-6431	1
Tag holder (quantity 200)	red (5×5 mm)	716432	LOCC Box BZR 7-6432	1
Tag holder (quantity 200)	blue (5×5 mm)	716433	LOCC Box BZB 7-6433	1
Tag holder (quantity 200)	yellow (5×5 mm)	716434	LOCC Box BZG 7-6434	1
Tag holder (quantity 120)	white (12×6 mm)	716441	LOCC Box BZW 7-6441	1
Tag holder	white (39.3×5 mm)	716443	LOCC Box BZW 7-6443	20
Cover for tag holder 716443	transparent	716444	LOCC Box-BAD 7-6444	20
A4 label sheets (quantity 240)	white	716445	LOCC Box-LEB 7-6445	10
Tag holder (quantity 50), printing 1–50	white	716446	LOCC Box BZW 7-6446	1
Copper rail, 1 m		716426	LOCC Box CU 7-6426	1
CU rail cover, 1 m		716427	LOCC Box AD 7-6427	1

11.11.2014 – Subject to technical modification

Part-No. 716408

USA: LUTZE INC.
13330 South Ridge Drive • Charlotte, NC 28273, USA
Tel. +1 (704) 504-0222 • Fax +1 (704) 504-0223
www.lutze.com • info@lutze.com

United Kingdom: LÜTZE Ltd.
Unit 3, Sandy Hill Park
Sandy Way, Amington • GB-Tamworth, Staffs B77 4DU
Tel. +44 (0)1827 31333-0 • Fax +44 (0)1827 31333-2
www.lutze.com • sales.gb@lutze.co.uk

SYSTEMATIC TECHNOLOGY