IF0300

Inductive sensor

IFA2004-ABOW/SL/BS-400B

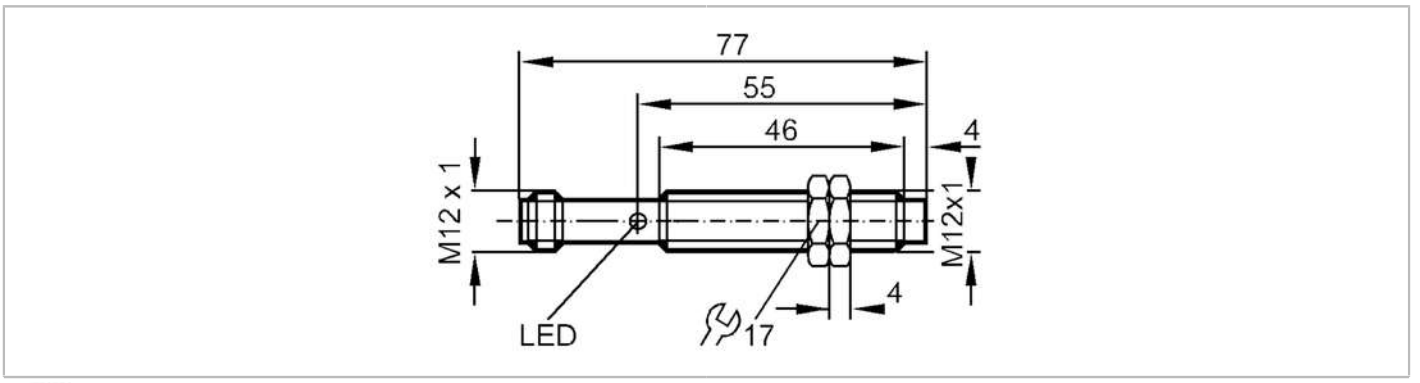

Product characteristics		
Output function		normally open
Sensing range	[mm]	4
Housing		threaded type
Dimensions	[mm]	M12 x 1 / L = 77
Electrical data		
Frequency AC	[Hz]	45...65
Operating voltage	[V]	20...250 AC
Protection class		I
Reverse polarity protection		no
Outputs		
Output function		normally open
Max. voltage drop switching output AC	[V]	8.5
Minimum load current	[mA]	8
Max. leakage current	[mA]	2
Permanent current rating of switching output AC	[mA]	200; (250 (...50 °C))
Short-time current rating of switching output	[mA]	900; (20 ms / 0,5 Hz)
Switching frequency AC	[Hz]	25
Short-circuit proof		no
Overload protection		no
Detection zone		
Sensing range	[mm]	4
Real sensing range Sr	[mm]	4 ± 10 %
Operating distance	[mm]	0...3.24
Accuracy / deviations		
Correction factor		steel: 1 / stainless steel: 0.7 / brass: 0.4 / aluminium: 0.3 / copper: 0.2
Hysteresis	[% of Sr]	3...15
Switch point drift	[% of Sr]	-10...10
Operating conditions		
Ambient temperature	[°C]	-25...80

IF0300

Inductive sensor

IFA2004-ABOW/SL/BS-400B

Protection		IP 67	
Tests / approvals			
EMC		EN 61000-4-2 ESD	4 kV CD / 8 kV AD
		EN 61000-4-3 HF radiated	3 V/m
		EN 61000-4-4 Burst	2 kV
		EN 61000-4-6 HF conducted	3 V
		EN 55011	class B
MTTF	[years]	932	
Mechanical data			
Weight	[g]	33.1	
Housing		threaded type	
Mounting		non-flush mountable	
Dimensions	[mm]	M12 x 1 / L = 77	
Thread designation		M12 x 1	
Materials		brass white bronze coated; sensing face: PBT natural; LED window: PBT natural; Nuts: brass white bronze coated	
Tightening torque	[Nm]	A = 3 mm: 3,5 Nm; B: 7 Nm	
Displays / operating elements			
Display		switching status	1 x LED, red
Electrical connection			
Required protection		miniature fuse to IEC60127-2 sheet 1; ≤ 2 A; fast acting	
Accessories			
Items supplied		lock nuts: 2	
Remarks			
Remarks		Recommendation: Check the safe functioning of the unit after a short circuit.	
Pack quantity		1 pcs.	

Electrical connection - plug

Connector: 1 x M12; coding: B



IF0300

Inductive sensor

IFA2004-ABOW/SL/BS-400B

Connection

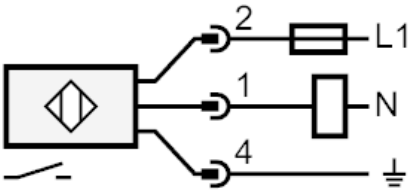

Note miniature fuse to IEC60127-2 sheet 1 ≤ 2 A fast acting

Diagrams and graphs

Installation

