EVCA14

Connecting cable with plug

ASTGH050MSD0001C05

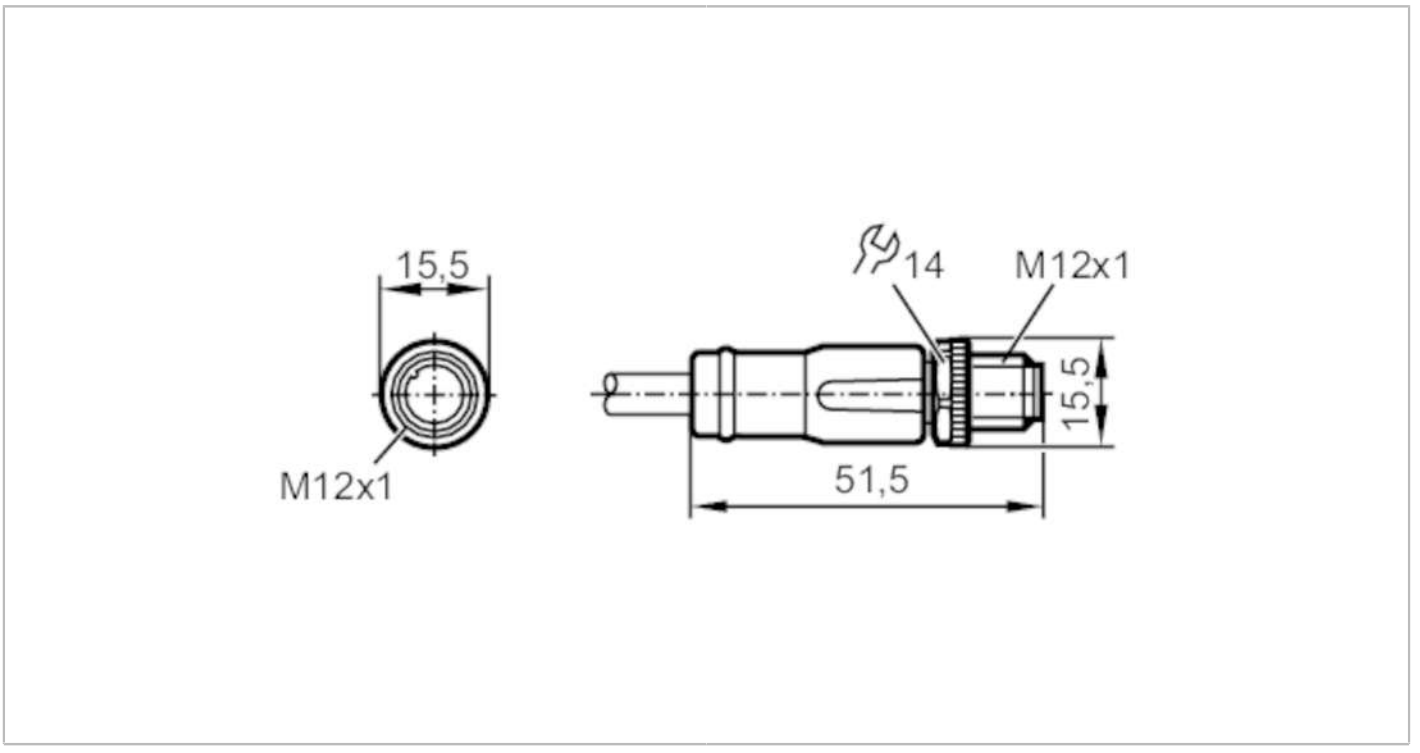

Application			
Special feature		Halogen-free; Gold-plated contacts; Screened cable; Drag chain suitability	
Application		CAN bus	
Electrical data			
Operating voltage	[V]	< 30 AC / < 36 DC	
Max. current load total	[A]	4	
Operating conditions			
Ambient temperature	[°C]	-25...80	
Storage temperature	[°C]	-25...55	
Storage humidity	[%]	10...100	
Other climatic conditions for storage according to stated class		1K22/ DIN 60721-3-1	
Protection		IP 67; IP 68; IP 69K	
Mechanical data			
Weight	[g]	122.15	
Dimensions	[mm]	15.5 x 15.5 x 51.5	
Moulded-body material		PUR	
Material nut		brass, nickel-plated	
Drag chain suitability		yes	
Drag chain suitability		bending radius for flexible use	min. 10 x cable diameter
		travel speed	max. 3.3 m/s for a horizontal travel length of 5 m and max. acceleration of 5 m/s²
		bending cycles	> 5 Mio.
		torsional strain	± 180 °/m

EVCA14

Connecting cable with plug

ASTGH050MSD0001C05

Remarks	
Pack quantity	1 pcs.

Electrical connection

Cable: 1 m, PUR, Halogen-free, lilac, Ø 8.4 mm, shielded; RD / BK: 2 x 0.75 mm² (42 x Ø 0.15 mm) + WH / BU: 2 x 0.5 mm² (19 x Ø 0.19 mm) + screen: 1 x 0.75 mm² (42 x Ø 0.15 mm)

Electrical connection - plug

Connector: 1 x M12, straight; coding: A; Moulded body: PUR, black; Locking: brass, nickel-plated; Contacts: gold-plated; Tightening torque: 0.6...1.5 Nm

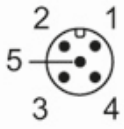

Connection

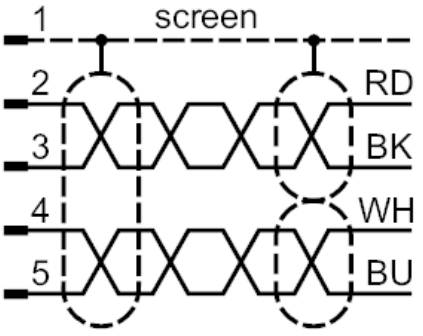

	Core colours :
BK =	black
BU =	blue
RD =	red
WH =	white
screen =	screen