JUMO GmbH & Co. KG
Delivery address: Mackenrodtstraße 14,
36039 Fulda, Germany
Postal address: 36035 Fulda, Germany
Phone: +49 661 6003-0
Fax: +49 661 6003-607
e-mail: mail@jumo.net
Internet: www.jumo.net

JUMO Instrument Co. Ltd.
JUMO House
Temple Bank, Riverway
Harlow, Essex CM 20 2TT, UK
Phone: +44 1279 635533
Fax: +44 1279 635262
e-mail: sales@jumo.co.uk
Internet: www.jumo.co.uk

JUMO Process Control, Inc.
8 Technology Boulevard
Canastota, NY 13032, USA
Phone: 315-697-JUMO
1-800-554-JUMO
Fax: 315-697-5867
e-mail: info@jumo.us
Internet: www.jumo.us

Capacitive hygrothermal transducers with intelligent interchangeable probes



- **For measuring relative humidity and temperature**
- **Measurement over the entire humidity range from 0 to 100% rH**
- **For operating temperatures from -40 to +80°C**
- **Intelligent interchangeable probes are easy to exchange without readjusting the device electronics**
- **With separate measurement probes option for humidity and temperature**
- **2m, 5m or 10m long adapter cable for probe extension**
- **Special rugged metal housing, can be used in clean rooms**
- **Integrated LC Display (optional)**
- **With standardized current or voltage outputs**
- **For versatile applications in the pharmaceutical industry and for greenhouse, clean room, storage and coldstore applications**



Plug-in measurement probes that can be interchanged within seconds are the main feature of this new series. Because the calibration data is directly stored in the probe, probes can be exchanged without any loss of accuracy. Highly-accurate calibration procedures and state-of-the-art microprocessor technology also ensure reliable measurement and high measuring accuracy over the entire field of application. The outstanding long-term stability is based on years of experience with the capacitive humidity sensors being used.
For applications in higher ambient temperatures, where space is at a premium or just to extend the probes, simply adapt the 2m, 5m or 10m long adapter cables available as options between the measurement probe and the transducer.
The usual voltage outputs 0 - 1V, 0 - 5V, 0 - 10V or 4 - 20mA (2-wire) current outputs are available as output signals and temperature scaling can be customized ex-factory to the required ranges (see order details).
An integrated LC Display option allows the current humidity and temperature vales to be shown alternately.

On-site calibration of humidity and temperature

The loop calibration of humidity and temperature values recommended by the FDA (Food and Drug Administration) in the pharmaceutical and biological engineering industries can easily be performed by means of the rH and T measurement probes that can also be supplied separately, as an option. Function keys are attached to the inside to make it simple to implement a necessary adjustment to the two analog outputs, when required.

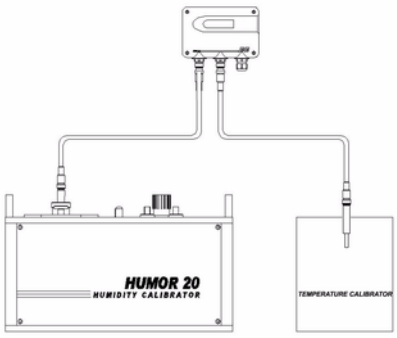

Reference probes

Reference probes are available as accessories to allow you to test the function and accuracy of the measuring loop. The two reference probes can be fitted instead of the interchangeable measurement probes and output fixed humidity and temperature values. Reference probes are supplied together with a test report and simulate a high humidity value and a low temperature value and vice versa (probe 1: 90% rH/5°C and probe 2: 10% rH/45°C). This makes it possible to test the two analog outputs at the top and bottom end of the scaling.



JUMO GmbH & Co. KG
Delivery address: Mackenrodtstraße 14,
36039 Fulda, Germany
Postal address: 36035 Fulda, Germany
Phone: +49 661 6003-0
Fax: +49 661 6003-607
e-mail: mail@jumo.net
Internet: www.jumo.net

JUMO Instrument Co. Ltd.
JUMO House
Temple Bank, Riverway
Harlow, Essex CM 20 2TT, UK
Phone: +44 1279 635533
Fax: +44 1279 635262
e-mail: sales@jumo.co.uk
Internet: www.jumo.co.uk

JUMO Process Control, Inc.
8 Technology Boulevard
Canastota, NY 13032, USA
Phone: 315-697-JUMO
1-800-554-JUMO
Fax: 315-697-5867
e-mail: info@jumo.us
Internet: www.jumo.us

Technical data

Humidity

Sensing element
Type: HC105 capacitive (SMD version, condensation permitted), largely maintenance free in normal, clean air

Measuring/working range
0 to 100 % rH

Medium
air, unpressurized, not corrosive

Accuracy
(incl. hysteresis, non-linearity and repeat accuracy)
±(1.5 + 0.5 % x measured value) % rH; (at <90 % rH; -15 to +40 °C)
±2.5 % rH; (at >90 % rH; -15 to +40 °C)
±(1.7 + 1.5 % x measured value) % rH; (at -40 to +80 °C)
The tolerance data includes the uncertainty of the factory calibration with an expansion factor k = 2 (double the standard deviation). The tolerance is calculated to EA-4/02, taking GUM (Guide to the Expression of Uncertainty in Measurement) into consideration.

Temperature dependence of the electronics
±0.006 % rH/°C

Response time rH
(with stainless steel mesh filter)
typ. <15 s (at 20 °C/$t_{0.9}$)

Temperature

Sensing element
Pt1000 thin film temperature sensor
tolerance class A to DIN EN 60 751

Measuring range
-40 to +60 °C, measurement probes directly on the hygrothermal transducer
-40 to +80 °C, remote measurement probes, by means of the adapter cable

Measuring accuracy

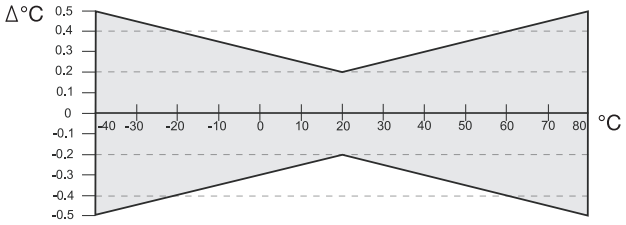

Temperature dependence of the electronics
±0,007 °C/°C

Response time T
(with stainless steel mesh filter)
typ. <3 mins ($t_{0.63}$), with combined measurement probe (rH+T)
typ. <6 mins ($t_{0.63}$), for separate T measurement probe

Analog outputs

0 to 100 % rH/xx to yy °C
(for T scaling, see order details)
0 to 1 V (-0.5 mA < I_L <0.5 mA)
0 to 5 V/0 to 10 V (-1 mA < I_L <1 mA)
4 to 20 mA (two-wire) (R_L <500 ohms)

Temperature sensitivity of the analog outputs

max. 0,2 $\frac{mV}{°C}$ or 1 $\frac{\mu A}{°C}$

Electrical data

Supply for
0 to 1V 10 to 35V DC or 9 - 29V AC
0 to 5V 12 to 35V DC or 15 - 29V AC
0 to 10V 15 to 35V DC or 15 - 29V AC
4 to 20mA 10 to 35V DC

Burden (I output)

$$R_L < \frac{Uv - 10V}{0{,}02A}[\Omega]$$

JUMO GmbH & Co. KG
Delivery address: Mackenrodtstraße 14,
36039 Fulda, Germany
Postal address: 36035 Fulda, Germany
Phone: +49 661 6003-0
Fax: +49 661 6003-607
e-mail: mail@jumo.net
Internet: www.jumo.net

JUMO Instrument Co. Ltd.
JUMO House
Temple Bank, Riverway
Harlow, Essex CM 20 2TT, UK
Phone: +44 1279 635533
Fax: +44 1279 635262
e-mail: sales@jumo.co.uk
Internet: www.jumo.co.uk

JUMO Process Control, Inc.
8 Technology Boulevard
Canastota, NY 13032, USA
Phone: 315-697-JUMO
1-800-554-JUMO
Fax: 315-697-5867
e-mail: info@jumo.us
Internet: www.jumo.us

General information

Housing	Al Si 9 Cu 3
Probes	stainless steel 1.4305 (reference probes made of PC plastic)
Dimensions	Housing: 163(135)mm x 90mm x 50mm (W x H x D) (rH/T) probe: 13mm x 91mm (D x L) (T) probe (separate): 12(6)mm x 93mm (D x L)
Cable gland	M 16 x1.5 (Lumberg connector option (RSF 50/11))
Terminals	Screw terminals for cable cross-sections up to 2.5mm^2
Housing protection class	IP65 (IP10 for rear cable entry, IP40 for plain wall mounting)
Ambient temperatures	Measurement probe: -40 to +60°C (+80°C with adapter cable) Electronics: -40 to +60°C Storage temperature: -40 to +60°C
Sensor protection	PTFE filter, pore size: 50µm High chemical resistance, response time $t_{0.1/0.9}$: typ. 14s Stainless steel mesh filter (standard), for average pollution, high mechanical strength, suitable for high humidity applications, response time $t_{0.1/0.9}$: typ. 7s
Weight	approx. 800g

Connection diagrams

Voltage output

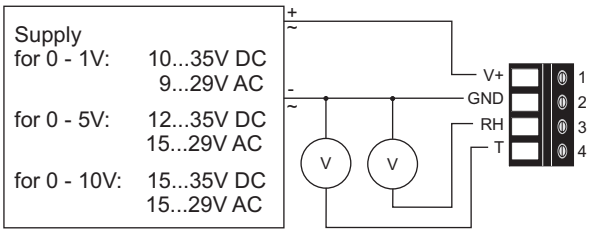

Current output

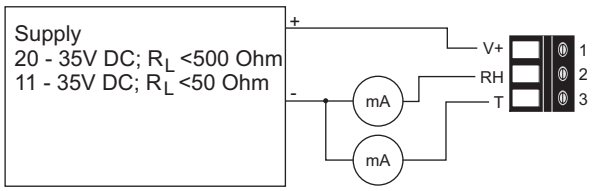

Connection diagrams for a Lumberg connection

Voltage output
Connector for supply and analog outputs
(front view)

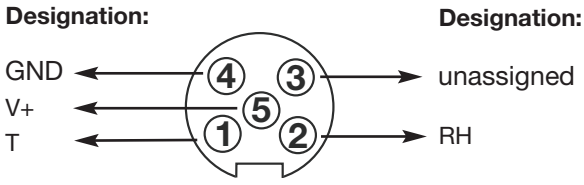

European Standard EN

Current output
Connector for supply and analog outputs
(front view)

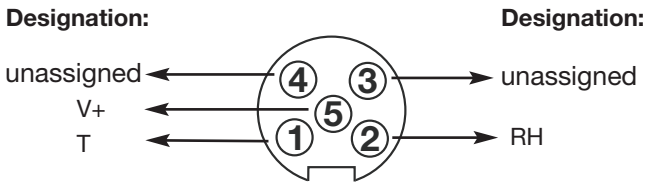

European Standard EN

JUMO GmbH & Co. KG
Delivery address: Mackenrodtstraße 14,
36039 Fulda, Germany
Postal address: 36035 Fulda, Germany
Phone: +49 661 6003-0
Fax: +49 661 6003-607
e-mail: mail@jumo.net
Internet: www.jumo.net

JUMO Instrument Co. Ltd.
JUMO House
Temple Bank, Riverway
Harlow, Essex CM 20 2TT, UK
Phone: +44 1279 635533
Fax: +44 1279 635262
e-mail: sales@jumo.co.uk
Internet: www.jumo.co.uk

JUMO Process Control, Inc.
8 Technology Boulevard
Canastota, NY 13032, USA
Phone: 315-697-JUMO
1-800-554-JUMO
Fax: 315-697-5867
e-mail: info@jumo.us
Internet: www.jumo.us

User information

Mounting

Mount the humidity transducer somewhere in the room that is representative for measuring humidity, on walls or on equipment and systems. Avoid siting it near radiators, windows and doors (when measuring indoors, also avoid outside walls) and on powerfully vibrating surfaces or in direct sunlight. The transducer must be protected against dirt, as well as falling or splashing water. Although condensation and splashwater will not damage the transducer, they can cause faulty readings until the probe element has dried out. Dust is not usually damaging, either, but it does reduce the dynamic response.

Maintenance notes

The capacitive humidity sensing element is largely maintenance free in normally clean air. Corrosive media and those containing solvents, can cause faulty readings and even failure. Deposits that ultimately form a water-repellent film on the sensing element, are also harmful. Dirty protective filters must be replaced in good time. You must not touch the surface of the humidity sensor with your hands. Use a soft brush to clean the sensor. Distilled water can also be used for rinsing, but solvents or cleaning agents must not be used. Once the transducer is completely dry, correct measured values should reappear.

Sensor coating

With some industrial processes, heavily polluted and/or corrosive environments can impair the function of the humidity sensor and the measured values may show signs of drift. The sensor coating, available as an option, offers better protection against this (see order details), as it greatly reduces the impact and noticeably improves the long-term stability of the transducer.

Test and calibration

Humidity sensor check sets can be used to test the accuracy of the humidity transducers from time to time. This process is described in more detail in DIN 50 008, IEC publication 260, ISO/R 483-1966. The basic principle is, that an aqueous, saturated saline solution creates a corresponding climate in an enclosed airspace. Sensor check sets with 33% rH, 55% rH and 76% rH values are available ex-stock as accessories. Calibration intervals depend heavily on the particular application. But we recommend that a check is carried out at least once a year.

Warning

Interfering with internal parts will invalidate any warranty claim.



JUMO GmbH & Co. KG
Delivery address: Mackenrodtstraße 14,
36039 Fulda, Germany
Postal address: 36035 Fulda, Germany
Phone: +49 661 6003-0
Fax: +49 661 6003-607
e-mail: mail@jumo.net
Internet: www.jumo.net

JUMO Instrument Co. Ltd.
JUMO House
Temple Bank, Riverway
Harlow, Essex CM 20 2TT, UK
Phone: +44 1279 635533
Fax: +44 1279 635262
e-mail: sales@jumo.co.uk
Internet: www.jumo.co.uk

JUMO Process Control, Inc.
8 Technology Boulevard
Canastota, NY 13032, USA
Phone: 315-697-JUMO
1-800-554-JUMO
Fax: 315-697-5867
e-mail: info@jumo.us
Internet: www.jumo.us

Dimensions

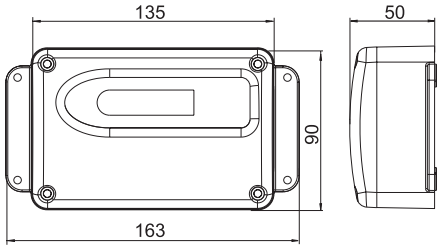

Transducer housing

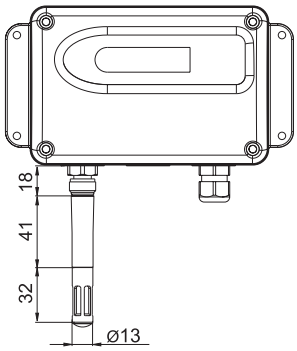

**Hygrothermal transducer for wall mounting
with one plug-in rH+T measurement probe**

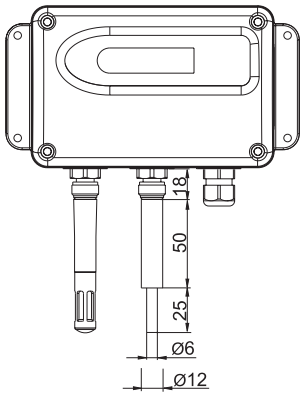

**Hygrothermal transducer for wall mounting
with two plug-in rH+T measurement probes**

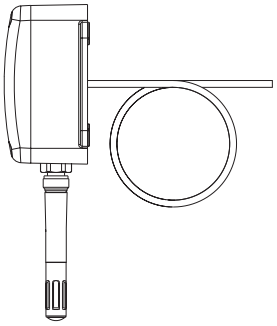

**Hygrothermal transducer for wall mounting
with rear cable entry**

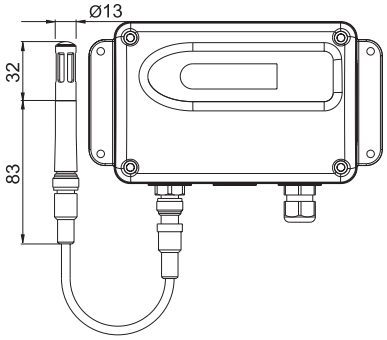

**Hygrothermal transducer for wall mounting
with one remote rH+T measurement probe**

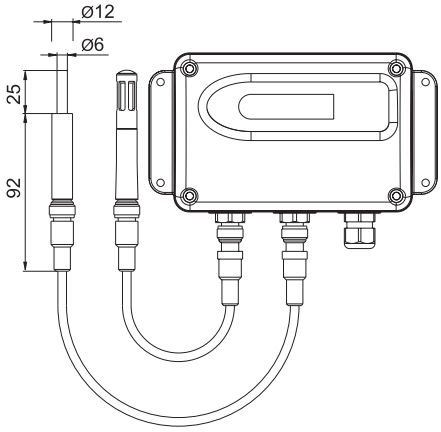

**Hygrothermal transducer for wall mounting
with two remote rH+T measurement probes**

Measurements in mm.

JUMO GmbH & Co. KG
Delivery address: Mackenrodtstraße 14, 36039 Fulda, Germany
Postal address: 36035 Fulda, Germany
Phone: +49 661 6003-0
Fax: +49 661 6003-607
e-mail: mail@jumo.net
Internet: www.jumo.net

JUMO Instrument Co. Ltd.
JUMO House
Temple Bank, Riverway
Harlow, Essex CM 20 2TT, UK
Phone: +44 1279 635533
Fax: +44 1279 635262
e-mail: sales@jumo.co.uk
Internet: www.jumo.co.uk

JUMO Process Control, Inc.
8 Technology Boulevard
Canastota, NY 13032, USA
Phone: 315-697-JUMO
1-800-554-JUMO
Fax: 315-697-5867
e-mail: info@jumo.us
Internet: www.jumo.us

Order details:

Capacitive hygrothermal transducers with intelligent interchangeable probes

(1) Basic version

907027/20 Hygrothermal transducer
wall version with combined measurement probe (rH+T)

907027/21 Hygrothermal transducer
wall version with separate measurement probes (rH/T)

Hardware configuration

(2) Hygrothermal transducer [1]

x	x	2 humidity and temperature (rH+T)

(3) Output signals (humidity; temperature)

x	x	051 0 to 1V; 0 to 1V
x	x	057 0 to 5V; 0 to 5V
x	x	065 0 to 10V; 0 to 10V
x	x	005 4 to 20mA; 4 to 20mA

(4) Cable entry

x	x	10 screwed cable gland (M 16 x 1.5), fitted underneath
x	x	20 cable gland, open at the back (clean room wall mounting)

(5) Filters

x	x	800 PTFE filter
x	x	889 stainless steel mesh filter (standard)

(6) Display

x	x	0 without an LC Display (standard)
x	x	1 with an LC Display

(7) Electrical connection (supply and analog outputs)

x	x	00 terminals (standard)
x		91 Lumberg connection

(8) Sensor protection

x	x	0 without coating (standard)
x	x	1 with coating

Software configuration (ex-factory only)

(9) Temperature unit

x	x	0 °C (standard)
x	x	1 °F

(10) Measuring ranges

x	x	14 0 to 100% rH; -40 to +60°C
x	x	15 0 to 100% rH; -40 to +80°C
x	x	21 0 to 100% rH; -30 to +60°C
x	x	22 0 to 100% rH; -30 to +70°C
x	x	09 0 to 100% rH; -20 to +60°C
x	x	10 0 to 100% rH; -20 to +80°C (stock version)
x	x	34 0 to 100% rH; 0 to 50°C
x	x	32 0 to 100% rH; 0 to 60°C
x	x	38 0 to 100% rH; 0 to 80°C
x	x	99 special measuring range (on request)

	(1)		(2)		(3)		(4)		(5)		(6)		(7)		(8)		(9)		(10)
Order code		-		-		-		-		-		-		-		-		-	
Order example	907027/20	-	2	-	005	-	10	-	889	-	1	-	00	-	0	-	0	-	14

Note:

Suitable power supply units for hygrothermal transducers can be found in Data Sheet 70.7500.

Stock versions:

(1)		(2)		(3)		(4)		(5)		(6)		(7)		(8)		(9)		(10)	Sales No.
907027/20	-	2	-	005	-	10	-	889	-	0	-	00	-	0	-	0	-	10	90/00503567
907027/21	-	2	-	005	-	10	-	889	-	0	-	00	-	0	-	0	-	10	90/00503568

[1] Adapter cable(s) for probe extensions, 2m, 5m or 10m in length, are available as accessories.

JUMO GmbH & Co. KG
Delivery address: Mackenrodtstraße 14,
36039 Fulda, Germany
Postal address: 36035 Fulda, Germany
Phone: +49 661 6003-0
Fax: +49 661 6003-607
e-mail: mail@jumo.net
Internet: www.jumo.net

JUMO Instrument Co. Ltd.
JUMO House
Temple Bank, Riverway
Harlow, Essex CM 20 2TT, UK
Phone: +44 1279 635533
Fax: +44 1279 635262
e-mail: sales@jumo.co.uk
Internet: www.jumo.co.uk

JUMO Process Control, Inc.
8 Technology Boulevard
Canastota, NY 13032, USA
Phone: 315-697-JUMO
1-800-554-JUMO
Fax: 315-697-5867
e-mail: info@jumo.us
Internet: www.jumo.us

Order details: Accessories

		(1)	**Basic version**
		907027/90	Interchangeable filter
		907027/91	Adapter cables for probe extensions
		907027/92	Replacement probes
		907027/93	Humidity sensor check sets
		907027/94	Reference probes
		907027/95	LC Display conversion kit
		(2)	**Interchangeable filter**
x		800	PTFE filter
x		889	stainless steel mesh filter (standard)
		(2)	**Adapter cables for probe extensions**
	x	02	2m
	x	05	5m
	x	10	10m
		(2)	**Replacement probes**
	x	884	individual measurement probe (T), stainless steel housing
	x	885	combined measurement probe (rH+T), stainless steel housing, mesh filter (standard)
	x	886	combined measurement probe (rH+T), stainless steel housing, PTFE filter
		(2)	**Humidity sensor check sets**
	x	820	33 % rH magnesium chloride
	x	821	53 % rH magnesium nitrate
	x	822	76 % rH sodium chloride
		(2)	**Reference probes**
	x	883	reference set (with 2 measurement probes (rH+T), fixed, simultaneous values)
		(2)	**LC Display conversion kit**
	x	882	LC Display, including metal housing cover

	(1)		**(2)**
Order code		-	
Order example	907027/90	-	889

Stock versions:

(1)		**(2)**	**Sales No.**
907027/90	-	800	90/00503575
907027/90	-	889	90/00503576
907027/91	-	02	90/00503577
907027/91	-	05	90/00503578
907027/91	-	10	90/00503579
907027/93	-	820	90/00332758
907027/93	-	821	90/00332759
907027/93	-	822	90/00332760