AVENTICS GmbH
Ulmer Straße 4
30880 Laatzen, GERMANY
Phone +49 (0) 5 11-21 36-0
Fax: +49 (0) 511-21 36-2 69
www.aventics.com
info@aventics.com

Further addresses:
www.aventics.com/contact

The data specified above only serve to describe the product. No statements concerning a certain condition or suitability for a certain application can be derived from our information. The given information does not release the user from the obligation of own judgement and verification. It must be remembered that our products are subject to a natural process of wear and aging.

An example configuration is depicted on the title page. The delivered product may thus vary from that in the illustration.

Translation of the original operating instructions. The original operating instructions were created in the German language.

R412021953–BAL–001–AC/09.2016
Subject to modifications. © All rights reserved by AVENTICS GmbH, even and especially in cases of proprietary rights applications. It may not be reproduced or given to third parties without its consent.

Montageanleitung | Assembly instructions | Instructions de montage
Istruzioni di montaggio | Instrucciones de montaje | Monteringsanvisning

Mittenschwenkzapfenbefestigung
Center trunnion mounting
Fixation à tourillon centrale
Fissaggio a perno oscillante centrale
Fijación de pivote oscilante central
Svängfäste mitten

MT4

R412021953/09.2016
Replaces: 05.2014, DE/EN/FR/IT/ES/SV

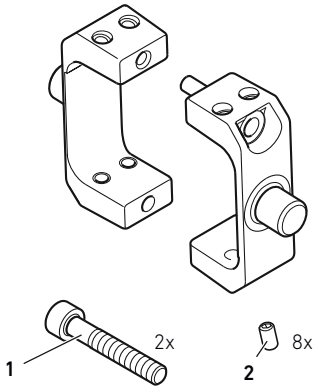

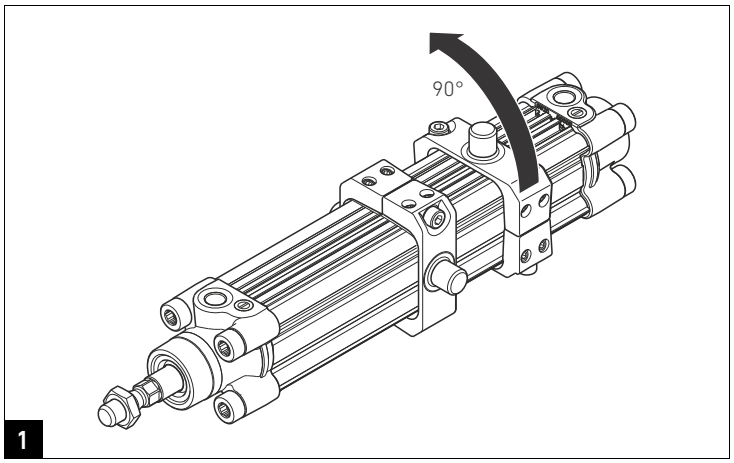

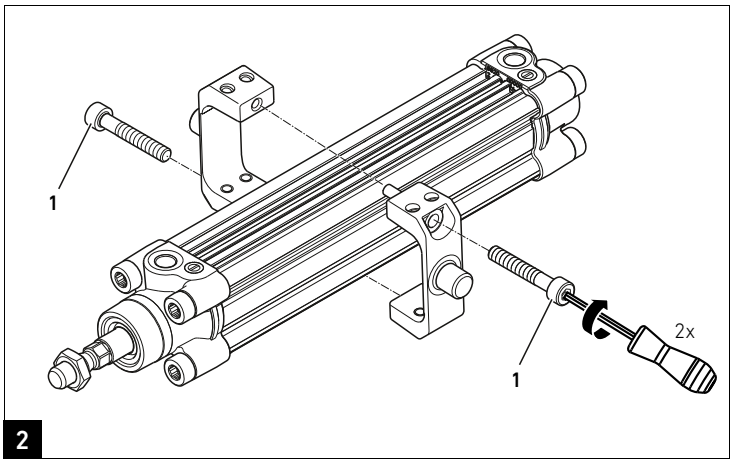

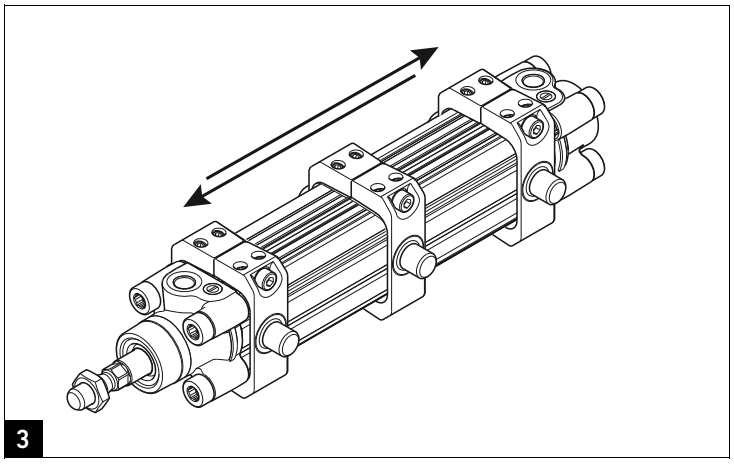

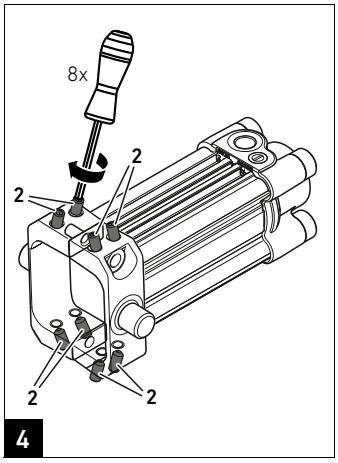

Ø [mm]	(1)		(2)	
	SW	MD [Nm]	SW	MD [Nm]
32–40	4	4.5–5	2.5	2.7–3
50	5	8.1–9	3	4.5–5
63–80	5	8.1–9	4	9–10
100–125	5	8.1–9	5	18–20

Ø Zylinder/cylinder/vérin/ cilindro/cilindro/cylinder
SW Schlüsselgröße/wrench size/ taille de la clé/Misura della chiave/ tamaño de llave/nyckelstorlek
MD Drehmoment/torque/couple/ coppia/par de apriete/vridmoment