

VERDERFLEX OEM

R3DC

Any questions? You may still have questions and/or comments after reading this brochure. Please feel free to contact us on +44 (0)1924 221 020 You can also respond via email to info@verderflex.com. For more information about Verderflex please visit our website **www.verderflex.com**



VERDERFLEX
Unit 3, California Drive,
Castleford WF10 5QH
United Kingdom

TEL +44 (0)1924 221 020
FAX +44 (0)113 222 0291
MAIL info@verderflex.com
WEB www.verderflex.com

AT Wien **BE** Aartselaar **BG** Sofia **CH** Basel **CN** Shanghai **CZ** Praha **DE** Haan **FR** Eragny s/Oise **GB** Castleford **HU** Budapest **IT** Torre Boldone **JP** Tokyo **NL** Groningen/Vleuten **PL** Katowice **RO** Bucuresti/Sibiu **RU** St Petersburg **SK** Bratislava **US** Newtown/Macon **ZA** Northriding

R3DC.EN.0913

VERDER
passion for pumps



R3DC

Robust design with thick wall tube for suction and pressure handling.



- Flow rates up to 3.4 l/min (54 US GPH)
- D.C. motor for speed/flow rate variations
- Typically used in:
  Printing production
  Dispensing
  Industrial detergent applications

R3DC Free Flow Curve

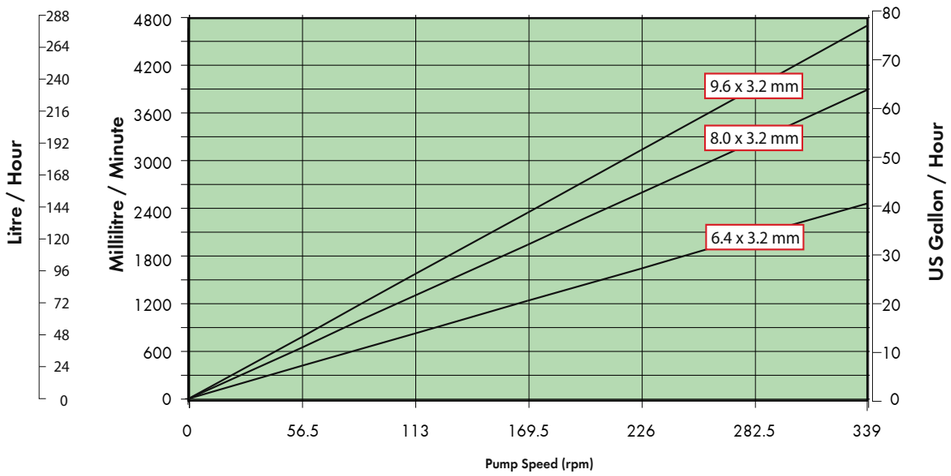

Suction

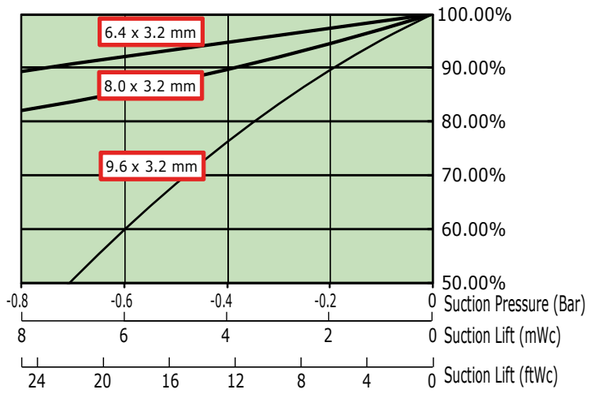

Discharge

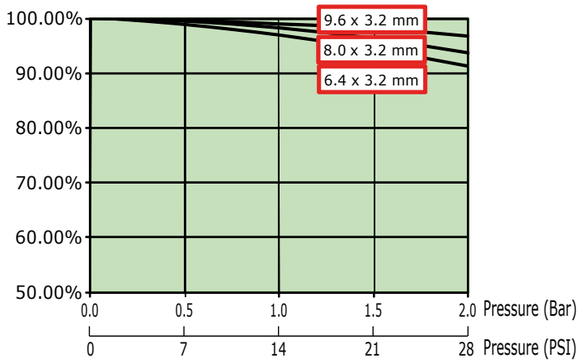

Flow rates with water at 20˚C (68˚F)

Technical Overview

Function	Detail
Pump head	Aluminium alloy with support bearing
Motor	12/24V D.C. 100W Spur gearbox
Rotor	Aluminium alloy
Power Supply	12/24V D.C. 100W
Tube	Verderprene and Silicone
Tube Sizes	6.4 x 3.2mm, 8.0 x 3.2mm and 9.6 x 3.2mm
Weight	1.75 kg (3.9 lb)

Tube Size Options

Tube (ID x WT)	55 RPM	125 RPM	240 RPM
6.4 x 3.2 mm (1/4" x 1/8")	0.4 l/min 24.4 l/hr 6.5 GPH	0.9 55.5 14.7	1.8 106.6 28.2
8.0 x 3.2 mm (5/16" x 1/8")	0.6 l/min 38.6 l/hr 10.2 GPH	1.5 87.8 23.2	2.8 168.5 44.5
9.6 x 3.2 mm (3/8" x 1/8")	0.8 l/min 46.9 l/hr 12.4 GPH	1.8 106.5 l/hr 28.1	3.4 204.5 54.0

General Arrangement Drawing and Mounting Positions

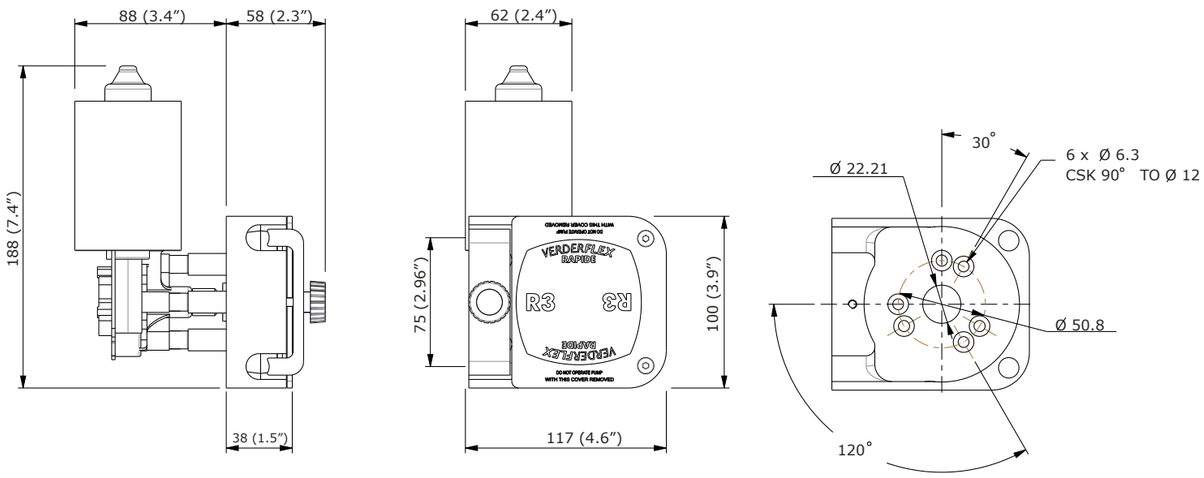

All dimensions in millimetres and inches