E21297

Mounting set for photoelectric sensors

O8 CLAMP BRACKET 12 MM

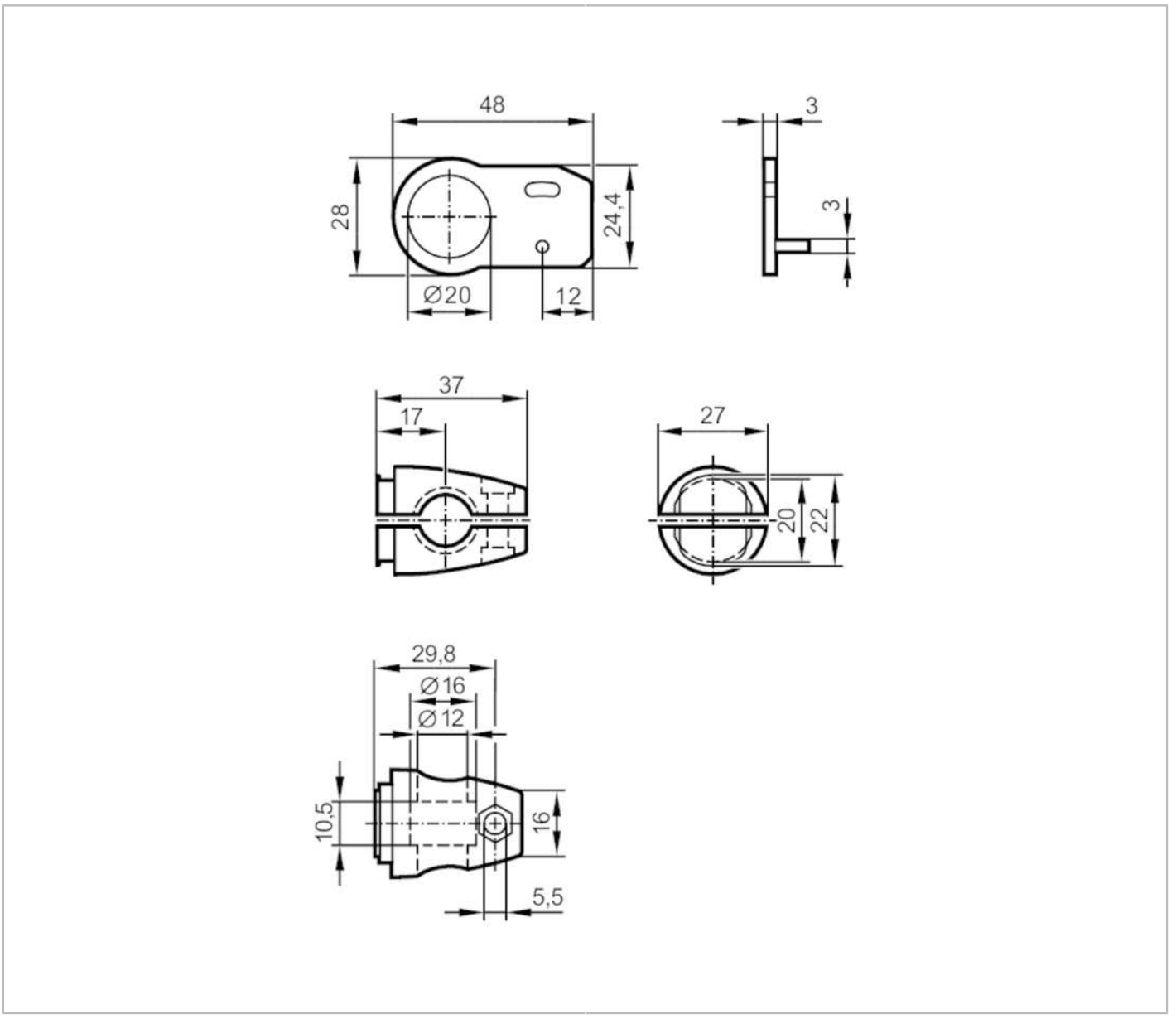

Application		
Design		for types O8
Mechanical data		
Weight	[g]	91
Type of mounting		Mounting rod; (Ø 12 mm)
Materials		stainless steel (1.4571/316Ti)
Accessories		
Items supplied		cylinder screws: 1 x M3 x 14, stainless steel
		cylinder screws: 1 x M5 x 16, galvanised steel
		lock nuts: 1 x M3 x 14, stainless steel
		lock nuts: 1 x M5 x 16, galvanised steel
		Clamp: 1
Remarks		
Pack quantity		1 pcs.