Product datasheet

Specifications



inductive sensor XS6 M18 - L74mm - brass - Sn8mm - 12..48VDC - M12

XS618B1DAM12

Main

Range of product	Telemecanique Inductive proximity sensors XS
Series name	General purpose
Sensor type	Inductive proximity sensor
Sensor name	XS6
Sensor design	Cylindrical M18
Size	74 mm
Body type	Fixed
Detector flush mounting acceptance	Flush mountable
Material	Metal
Type of output signal	Discrete
Wiring technique	2-wire
[Sn] nominal sensing distance	8 mm
Discrete output function	1 NO
Output circuit type	DC
Electrical connection	Male connector M12, 4 pins
[Us] rated supply voltage	12...48 V DC with reverse polarity protection
Switching capacity in mA	<= 100 mA DC with overload and short-circuit protection
IP degree of protection	IP67 conforming to IEC 60529 IP69K conforming to DIN 40050

Complementary

Thread type	M18 x 1
Detection face	Frontal
Front material	PPS
Enclosure material	Nickel plated brass
Sensing range	> 4...8 mm
Operating zone	0…6.4 mm
Differential travel	1...15% of Sr
Status LED	Output state: 1 LED (yellow)

Disclaimer: This documentation is not intended as a substitute for and is not to be used for determining suitability or reliability of these products for specific user applications

Supply voltage limits	10…58 V DC
Switching frequency	<= 2000 Hz DC
Maximum voltage drop	<4 V (closed)
Maximum delay first up	10 ms
Maximum delay response	0.3 ms
Maximum delay recovery	0.3 ms
Marking	CE
Threaded length	52 mm
Length	74 mm
Net weight	0.04 kg

Environment

Product certifications	UL CSA
Ambient air temperature for operation	-25…70 °C
Ambient air temperature for storage	-40…85 °C
Vibration resistance	25 gn amplitude = +/- 2 mm (f = 10…55 Hz) conforming to IEC 60068-2-6
Shock resistance	50 gn for 11 ms conforming to IEC 60068-2-27

Packing Units

Unit Type of Package 1	PCE
Number of Units in Package 1	1
Package 1 Weight	63.0 g
Package 1 Height	2 cm
Package 1 width	8 cm
Package 1 Length	12 cm
Unit Type of Package 2	S01
Number of Units in Package 2	22
Package 2 Weight	1.571 kg
Package 2 Height	15 cm
Package 2 width	15 cm
Package 2 Length	40 cm

Offer Sustainability

Sustainable offer status	Green Premium product
REACh Regulation	REACh Declaration
EU RoHS Directive	Pro-active compliance (Product out of EU RoHS legal scope) EU RoHS Declaration
Mercury free	Yes
RoHS exemption information	Yes
Environmental Disclosure	Product Environmental Profile
Circularity Profile	End of Life Information

Contractual warranty

Warranty	18 months

Dimensions

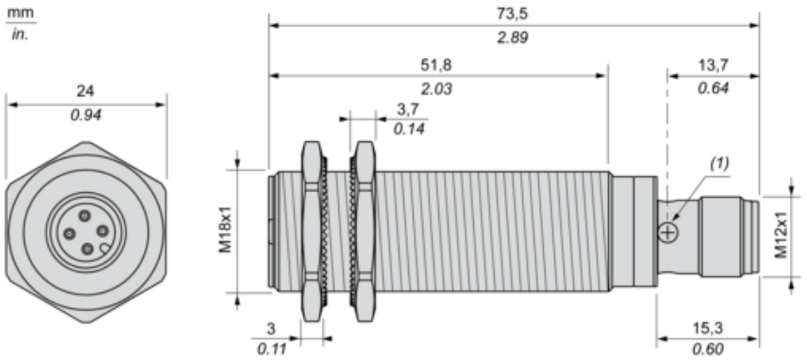

(1) : LED

Minimum Mounting Distances

Side by side

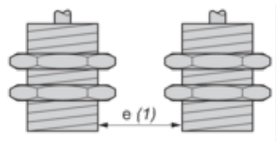

e (1) ≥ 16 mm/0.63 in.

Face to face

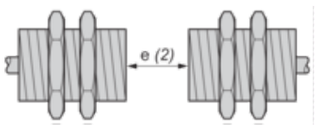

e (2) ≥ 100 mm/3.94 in.

Facing a metal object

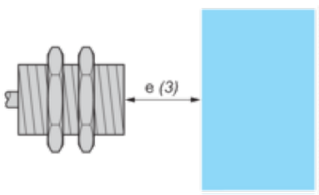

e (3) ≥ 25 mm/0.98 in

Wiring Schemes

2-Wire Non-polarised

M12 connector

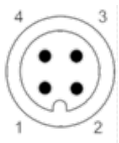

NO output

