Megger

RCDT300 Series
Residual Current Device testers

USER MANUAL

⚠ SAFETY WARNINGS

- **Safety Warnings** and **Precautions** must be read and understood before the instrument is used. They **must** be observed during use.
- Continuity of protective conductors and earthed equipotential bonding of new or modified installations **must** be verified **before** carrying out RCD tests.
- Do not leave the instrument connected to the mains supply when not in use.
- Circuit connections and exposed metalwork of an installation or equipment under test must not be touched.
- Ensure that hands remain behind guards of probes/clips when testing.
- **Do not move** the rotary selector knob position while a test is in progress.
- The instrument should **not** be used if any part of it is damaged.
- Test leads, probes and crocodile clips **must** be in good order, clean and with no broken or cracked insulation.
- The battery cover must be in place whilst conducting tests.
- Voltage indicator LED's cannot reveal a N-PE supply reversal.

NOTE

THE INSTRUMENT MUST ONLY BE USED BY SUITABLY TRAINED AND COMPETENT PERSONS.

Users of this equipment and/or their employers are reminded that Health and Safety Legislation requires them to carry out valid risk assessments of all electrical work so as to identify potential sources of electrical danger and risk of electrical injury such as inadvertent short circuits.

Some national safety authorities recommend fused leads for voltage measurement on high energy systems. If RCD or Loop tests are made it may cause the fuse to rupture, and so they must be used with caution on voltage testing.

CONTENTS

Safety warnings:	2
Introduction	4
General description	4
Case contents	5
LCD display	6
Top panel	6
Lid open/closure	7
Preparations for use	8
Batteries	8
Preliminary test lead check	8
General operating instructions	8
Display warning symbols	9
Setup procedure	9
Reverse polarity detection	9
Touch voltage	9
Test leads	10
Test lead connection.	10
LED indicators	11
Residual current device [RCD] testing	11
RCD type selection	12
1/2I RCD non-tripping measurement	12
1xI & 5xI RCD trip time measurement	12
0 or 180° testing	13
RampTest [RCDT320 and RCDT330 only]	13
DC sensitive RCD test	13
Auto RCD test (RCD320 and RCDT330 only)	13
Voltage measurement	14
Touch voltage	14
Frequency Hz (RCDT320 and RCDT330 only)	16
Replacing batteries and fuses	17
Low battery warning symbol	17
To replace batteries	17
Fuse blown indication	17
Preventive maintenance	19
Specification	19
Basic and service errors	20
Accessories and equipment	21
Repair and Warranty	22

Symbols used on the instrument are:


Caution: refer to accompanying notes


Equipment protected throughout by Double Insulation (Class II)


Equipment complies with current EU directives.



Equipment complies with 'C tick' requirements

INTRODUCTION

Thank you for purchasing the Megger RCD Tester.

For your own safety and to get the maximum benefit from your instrument, please ensure that you read and understand the following safety warnings and instructions before attempting to use the instruments.

This user manual describes the operation and functions of the following RCDT300 series of RCD testers:

RCDT310

RCDT320

RCDT330

GENERAL DESCRIPTION

The RCDT300 Series test instruments have the following features:

Feature	RCDT310	RCDT320	RCDT330
3 Phase safe	■	■	■
Display backlight		■	■
Battery status indication	■	■	■
Auto power down	■	■	■
Fuse blown indication	■	■	■
L-N-E polarity indicators	■	■	■
Voltmeter	■	■	■
Frequency measurement		■	■
Reverse polarity operation * (can be disabled)	■	■	■
1/2I, I, 5I RCD trip time test	■	■	■
Auto sequence test		■	■
Max touch voltage selectable (25/50 V)	■	■	■
RCD trip current test (RAMP)		■	■
0º/180º polarity selection	■	■	■
Selective breakers	■	■	■

* Not available on UK versions

CASE CONTENTS

Feature	RCDT310	RCDT320	RCDT330
DC breakers (1/2 I, I, 5I)	■	■	■
Programmable breakers			■
30, 100, 300, 500 mA RCDs	■	■	■
10 mA/1000 mA RCD		■	■
Plug ended test lead	■	■	■
2 wire test lead probe/croc clip ended		■	■
Calibration certificate	■	■	■
IEC61010-1 300V CATIII	■	■	■
EN61557	■	■	■
Results storage			■
Downloading			■
USB			■

Please complete the warranty card and return it to Megger Limited as soon as possible to help us reduce any delays in supporting you should the need arise.

Carton contents RCDT310, RCDT320 and RCDT330:

1 x RCDT300 series RCD tester

1 x 2 wire test lead with prods with clips (RCDT320, RCDT330 only)

8 x AA (LR6) batteries (fitted in instrument)

1 x Warranty card

1 x Calibration certificate

1 x CD containing user manual

1 x Safety instructions

1 x USB download lead (RCDDT330 only)

1 x Download manager CD (RCDT330 only)

1 x Printed quick start guide

1 x Mains plug test lead

LCD DISPLAY

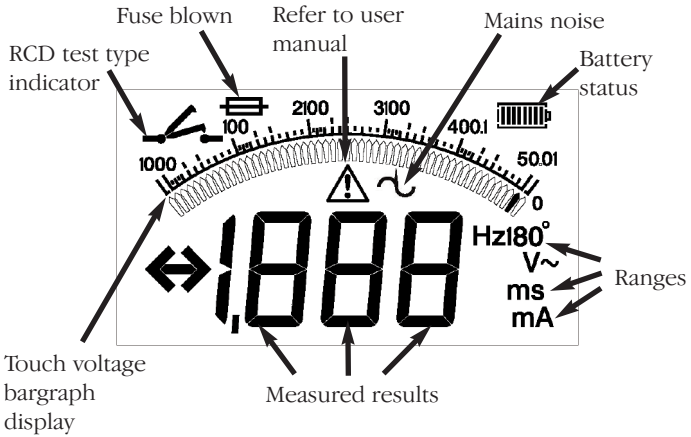

FRONT PANEL

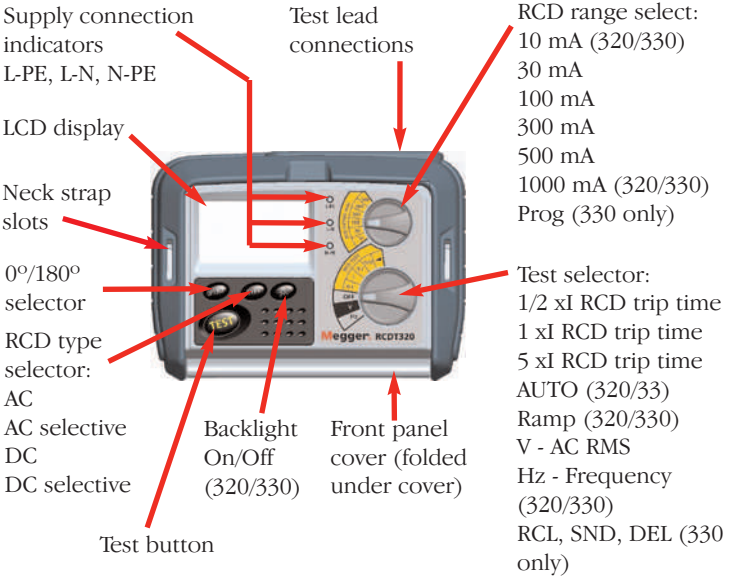

Connection Panel

RCDT300 Series test lead connections

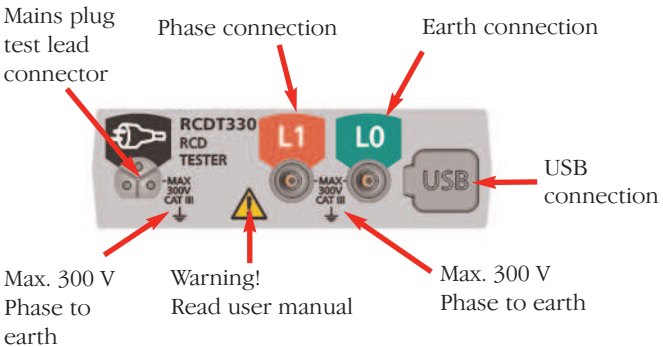

Additional RCDT330 Controls

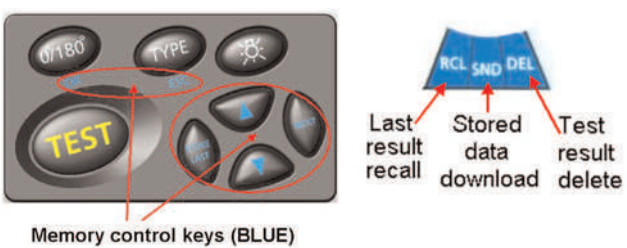

Memory control keys:

STORE:..... Store initiates the storing of a test result.

LAST/NEXT:..... Selects the type of location; ie Job, distribution board, circuit, phase etc.

ESC:..... Aborts a save at any time.

OK:..... Final operation to save the result.

▲ ▼ Selects the job, db, circuit number; ie 01,02,03 etc

Lid open/closure

1. Open lid by lifting up front panel tab (1).
2. Fold-away underneath instrument (2 & 3) and push into retaining slot (4).

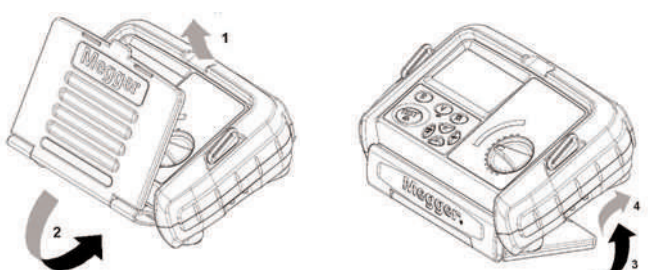

Batteries

The Megger RCDT300 series instruments are supplied with batteries fitted. When batteries become exhausted, refer to page 17, battery replacement.

Warning: Do not switch the instrument on with the battery cover removed.

Preliminary test lead check

Functional verification

Before each use of the instrument, visually inspect the test leads, prods and crocodile clips to confirm that their condition is good, with no damaged or broken insulation.

Test inhibit

The following condition may cause the instrument to inhibit testing:

Out of range supply voltage

If an out of range voltage or frequency exists on the circuit under test, or on a very noisy mains supply, testing will be automatically inhibited.

The RCD tests requires a minimum supply voltage to operate.

If the warning <***V is displayed, the supply voltage is below that required to perform an RCD test.

*** = supply voltage indication.

Overheating

Repetitive RCD Ramp testing and some high current RCD trip testing generates heat within the instrument. If this heat becomes excessive the instrument will warn the operator by displaying the **hot** symbol, and prevent further testing until the instrument has had a chance to cool down.

Fuse Blown

A fuse blown will prevent the instrument from making further tests. The fuse indicator will be displayed.

Default voltmeter

The default voltmeter automatically operates in all test modes, indicating connection to a live system.

Auto power-down

To extend battery life the instrument will automatically switch off six minutes after the last operation.

It can be switched off manually by selecting [OFF] with the rotary switch,

or switched back on again by pressing the [TEST] button.

Backlight operation (RCDT320 and RCDT330 only)

The RCDT320 and RCDT330 LCD display may be backlit. The backlight function can be selected at any time while the instrument is switched on by pressing the BACKLIGHT ☼ button.

The backlight function will switch off automatically 15 seconds after the instrument has finished testing.

Display warning symbols

⚠ Refer to user manual.

Any time the warning triangle is displayed the operator should refer to the user manual for further information.

Battery condition indication. Refer to page 17.

Fuse blown indicator, appears when an instrument fuse has failed. Refer to page 16.

>280V Indicates a supply voltage in excess of the allowed is present.

<50 V* Supply voltage too low/missing

hot Indicates the instrument needs to cool down before it can continue RCD testing

***** May vary depending on RCD test and instrument type.

Setup procedure

Note: Line reversal and RCD touch voltage configuration features are only available on the instruments as per the relevant tables in the specification section of this document.

Reverse polarity detection (not available on the UK version) / Touch voltage setting

To select Polarity reversal acceptance or rejection:

1. With the instrument switched OFF, hold down the [TEST] button and turn the range knob to any ON position.
2. Keep the button held down until the instrument displays the 'SET' warning.
3. Now release the [TEST] button.
4. Press the [TEST] button again to view the current setting for line/neutral swapping.
5. The display shows 'L+L' (instrument will perform tests with L & N swapped) or 'L+N' (instrument will not perform tests with L & N swapped).

NOTE: LED's will illuminate to indicate:-
L-PE ON = No reverse polarity
L-PE & N-PE ON = Reverse polarity allowed.

6. Press the [0/180º] button to change the setting.
7. Press the [TEST] button to go to the next item in the setup menu.

RCD touch voltage selection

To set the touch voltage inhibit limit:

1. With the instrument switched OFF, hold down the [TEST] button and turn the range knob to any ON position.
2. Keep the button held down until the instrument displays the 'SET' warning.

3. Now release the [TEST] button.
4. Press the [TEST] button twice to view the current settings for the touch voltage.

The display shows the fault voltage limit, '25 V' or '50 V'.

If the fault-voltage display is active, a bar-graph display will also appear.

5. Press the [0º/180º] button to change the limit setting from 25V to 50V and back.
6. Press the [TYPE] button to turn bar-graph display ON or OFF.
7. Press the [TEST] button to exit from the set-up menu.

Test leads

All test leads form part of the measuring circuit of the instrument and must not be modified or changed in any way, or be used with any other electrical instrument or appliance.

The colour code of the cord is:

Earth (Ground)	Yellow/Green
Neutral	Blue
Phase (Line)	Brown

NOTE: A plug severed from the power cord must be destroyed, as a plug with bare conductors is hazardous in a live socket outlet.

Test lead connection

The supplied test leads should be connected to the appropriate sockets on the rear of the instrument marked L0 and L1, or to the 3 way test socket.

Standard test probes and crocodile clips are supplied for connection to the circuit under test with the RCDT320 only.

Application

This instrument may be connected live to earth or between live conductors of systems that have a rated voltage of 300 V a.c. rms to earth and an installation (overvoltage) Category III or lower.

This means that the instrument may be connected to any fixed wiring of a building installation, but not to primary supply circuits such as overhead cables. To maintain user safety and ensure accurate measurements, only use the test leads supplied by Megger.

System diagram - Where to use each test

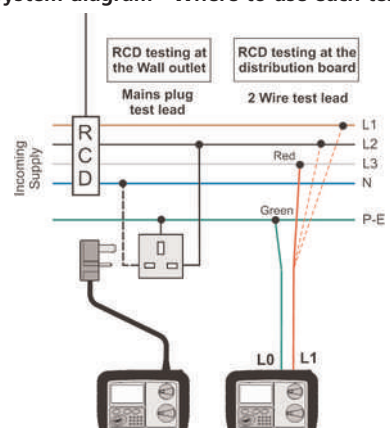

LED indicators

Three RED led indicators show circuit connection status when correctly connected to a live circuit. These are for indication purposes only and should not be relied upon as a indication of the presence of a hazardous voltage.

When connected to the circuit to be tested the three status LED's will show the following supply connection information:

LED Indicator	Normal Supply	Reversed (L-N) supply	Notes
			●=ON ◎= OFF
L - PE	●	◎	Voltage between L- PE greater than 25 V
L - N	●	●	Voltage between L-N greater than 25 V
N - PE	◎	●	Voltage between N-PE greater than 25 V

Warning: Voltage indicator LED's cannot reveal a N-PE supply reversal

Polarity Indication

If connected to a single phase power supply by a plug or by the 3-wire lead set, three LED's marked L-PE, N-PE and L-N respectively will indicate supply polarity

Method of measurement

The plug ended test lead or two wire lead should be used for these measurements. A constant current source is connected across the supply and the time taken for the supply to trip is measured by the instrument in milliseconds (ms).

The RCDT310, RCDT320 and RCDT330 - can perform the following RCD tests:

Type The RCD type is selectable from, AC, AC Selective, DC and DC Selective.

1/2I Non-tripping test at half the rated RCD trip current for 2 seconds, during which the RCD should not trip.

I Tripping test at the rated RCD trip current started on zero crossing of the positive half cycle. The trip time will be displayed

5I Tripping test at 5 x the rated RCD trip current. The trip time will be displayed in milliseconds.

0 or 180° Some RCDs are sensitive to the polarity of the supply, i.e whether the test current is applied on the instantaneous rising or falling part of the supply cycle. Tests should therefore be performed at 0° and 180° and the maximum time recorded.

Additionally the RCDT320 and RCDT330 can perform the following tests:

AUTO Automatically steps through each RCD test (including 0 or 180°) whilst the operator stands by the RCD to reset it.

RampTest Used to check the trip current of an RCD.

Additionally the RCDT330 can perform the following tests:-

Programmable RCDs
Programmable RCDs can be tested from 10 mA to 1000 mA,

RCD type selection
To select the RCD type to be tested:

1. Set the top RCD selection knob (top knob) to the desired RCD current range.
2. Set the RCD test knob (lower knob) to 1/2I, I or 5I as required.
3. Press the [TYPE] button to select the type of RCD under test:

Options are:

AC Standard (displays 'AC') (Default)

AC Selective (displays 'AC.S')

DC Sensitive (displays 'dc')

DC Selective (displays 'dc.S')

1/2I RCD (Non-tripping) measurement
To test the tripping time of the installed RCD under test:

Range selection:

1. Connect the mains plug test lead or 2-wire Red/Green test lead to the instrument.
2. Plug in the mains plug test lead to the wall outlet, or the 2 wire test lead across the RCD (refer to connection drawing, go to page 10).
3. Set the top RCD selection knob to the correct range for the RCD under test.
4. Set the bottom range knob to [1/2I]. The RCD trip indicator will display a closed symbol .
5. Ensure the display shows the mains voltage.
6. Press the [TEST] button. The instrument should display >1999ms and the RCD should NOT trip.
7. Refer to the application note on Touch Voltage at the end of this section.

NOTE: If the RCD should trip while performing a 1/2I test the error message '**trP**' will be displayed instead of the time display.

1xI RCD trip time measurement
To test the [1xI] trip time of the installed RCD:

1. Repeat the previous test for 1/2I, but with the bottom range knob set to I. The RCD trip indicator will display an open symbol .
2. The instrument should display the RCD trip time in milliseconds.

If the display shows >300 ms the RCD has failed to trip in the appropriate time. Check your test lead connections to the RCD and repeat the test.

If the RCD still fails to trip, suspect a faulty RCD.

Note: See also 0°/180° testing below.

The RCD test may abort with ">25 V" or ">50 V" depending on touch voltage setting message if the loop resistance is so high that the test cannot proceed.

5xI RCD trip time measurement
1. Repeat the previous test for 1/2I, but with the bottom range knob set to 5xI. The RCD trip indicator should display an open symbol .
2. The instrument should display the RCD trip time in milliseconds.

If the display shows >40 ms the RCD has failed to trip in the appropriate

time. Check your test lead connections to the RCD and repeat the test.

If the RCD still fails to trip, suspect a faulty RCD.

NOTE: The current limit for the 5I test is 100 mA, as the test current available is limited to 1 Amp.

0° or 180° testing

Both the [I] and [5I] tests should be performed for 0° and 180°.

Repeat the I and 5I tests as above but with the instrument set to 180°.

0° or 180° is selected by pressing the [0°/180°] and the greatest trip time for each test recorded.

RampTest (RCDT320 only) not programmable RCD

The RCD trip current is measured by applying a test current of half the rated trip current and increasing this every 200 ms. When the RCD trips, the current flowing is recorded and displayed in mA.

1. Select the appropriate RCD rated current on the top range knob.
2. Select the RAMP test on the lower range knob.
3. Press the [TEST] test button
4. The RCD should trip and the trip current will be is displayed.
5. If the RCD fails to trip, >***mA is displayed where *** mA indicates the maximum RCD tripping current allowed and will vary depending on range selected.

DC Sensitive RCD test [RCD]

D.C. sensitive RCDs are tested as per standard RCDs. The RMS current used is 2 x the rated operating current of the RCD.

As with the normal RCDs, these should be tested at 0° and 180°, or in the case of DC sensitive RCD's, positive and negative.

AUTO RCD test

AUTO test will run the 1/2I, I & 5I plus 0° and 180° tests automatically. The operator can stand by the RCD to reset it when it trips on the I & 5I tests.

1. Connect to the circuit as per the 1/2I test above.
2. Select the RCD current rating on the top range knob.
3. Select the AUTO function on the lower range knob.
4. Press the TEST button to start the test. The lock symbol will flash to indicate a AUTO test sequence is running.
5. The display will show 't1' to 't5' in the display to indicate which test the instrument is running.
6. Reset the RCD each time it trips.
7. On completion of testing, results can recalled by pressing the 0°/180° button.

To indicate each test, segments of the bar graph are displayed as below:

none = 1/2I test

I = 1xI test

IIIII = 5 I test



Example shows 5I on 0°

Possible sources of error

Measurement results can be affected by the following:

1. Significant operating errors can occur if loads, particularly rotating machinery and capacitive loads are left connected during tests.
2 A poor connection to the circuit under test.

NOTE: Measured voltage should not exceed 300 V phase to earth.

To measure the voltage of the electrical supply:

1. Set the instrument to the [V] range.
2. Connect the GREEN OR (L0) lead to the protective Earth (PE) and the RED or (L1) lead to the phase to be measured. (Alternatively connect the mains plug test lead to a suitable mains outlet).
3. The instrument will display the Phase to Earth voltage.

Touch Voltage

On all Megger RCDT300 series testers, the touch voltage is calculated at the start of an RCD test to ensure it will remain below the safe 25 V or 50 V limit as required by the application.

On the RCDT300 series instruments the touch voltage limit can be switched from 50 V to 25 V as the application demands.

Should the touch voltage calculation identify a higher touch voltage than that permitted, the RCD tester will stop the test, thus preventing the presence of an unsafe voltage on the earth during the test, should the test have taken place.

For those customers that require the touch voltage to be displayed, this can be displayed by activating the analogue arc display, as described in the instrument set-up procedure.

Once activated the touch voltage will be displayed on an RCD test, even if the voltage is below the permitted limits.

TEST RESULT STORAGE (RCDT320 ONLY)

How results are stored:

Results storage has the following structure:

→ 000, → 255 = Job number

b01,b02… = Distribution board No.

c01, c02… = Circuit number

L-E = Circuit type (L-E only)

P1 to P3 = Phase

Job number (→ 000, → 001…) acts as work folders. Sets of results can be saved to a particular job number and easily separated when downloaded.

b01, b02… Distribution board number:

c01, c02… Circuit reference

Results can be assigned a specific distribution board number and circuit reference number.

L-E Test type: defines the circuit type (only L-E available on RCDT).

P1,P2,P3 Phase number: Each test can be stored under a particular phase, P1, P2 or P3.

Unique test number: Each test result is assigned a unique test number, from 0 to 1999 logged automatically. This cannot be changed by the user.

To store a result:

1. Select an RCD test mode and make a measurement as described earlier.

At the completion of the test press STORE.

2. Select Job reference number (→ 000, → 001 etc) using ↑↓ keys then press NEXT.

(Hold the key down to scroll quickly through the numbers)

3. Select distribution board number (b01,02 etc) using ↑↓ keys then press NEXT

4. Select circuit number (c01,02 etc) using ↑↓ keys then press NEXT

5. Circuit type is fixed at L-E, press NEXT

6. Select the Phase using ↑↓ keys then press NEXT. The screen will display a unique test number, which is attached to that particular test.

7. Press OK to save the result or ESC to abort.

Storing a subsequent result:
To save the next test under the same location job number, distribution board etc:

1. Make another measurement as described earlier and press STORE.

2. The last Job number will be displayed. Press OK.

3. The unique test number will be displayed. Press OK and the result is stored.

NOTE: To change any setting before saving a result, scroll down through the result using the NEXT/LAST keys. Change the reference number using the ↑↓ keys and press OK twice to store result.

To recall the last test result:
1. Set the range knob to RCL

2. The last unique test number is displayed

3. Press OK and the test result will be displayed.

Press the LAST or NEXT to scroll through all test parameters if applicable.

NOTE: Only the last test result can be recalled to the display.

Downloading results to a PC

1. Connect the tester to teh PC using the USB test lead.
2. Set the tester range knob to [Snd].
3. Run Megger PowerSuite Professional or Megger Download Manager on the PC.
4. Select “Download from tester”.
5. The test data will automatically download its contents to the PC.

A bar graph shows the status of the download.

Deleting test results

To delete the latest test result;

1. Set the range knob to [dEL]. The display will flash "dEL" followed by the test number to be deleted.
2. Press the OK button. The last test result will be will be deleted.

WARNING: This operation is not reversible.

To delete all test data:

1. Set the range knob to [dEL]. The display will flash "dEL".
2. Press the NEXT or LAST key. The display will flash "ALL".
3. Press the OK button. All the test results will be deleted.

A bar graph shows the progress of the deletion.

WARNING: This operation is not reversible. All data will be deleted.

To measure the frequency of the electrical supply:

1. Set the instrument to the [Hz] range.
2. Connect the GREEN or (L0) lead to the protective earth (PE) and the RED or (L1) lead to the phase to be measured.
3. The instrument will display the frequency in Hz.

REPLACING BATTERIES AND FUSES

Batteries

Battery type: 8 x LR6 (AA), 1.5 V Alkaline, or 8 x 1.2V NiCAD, or 8 x 1.2V NiMH

Low battery warning symbol

The battery condition is continuously displayed by the symbol . When the batteries are exhausted, symbol will show and testing is inhibited.

If symbol appears as less than fully charged with new batteries, check for correct polarity.

NOTE: Fully charged NiMH or NiCAD rechargeable batteries show a lower charge than Alkaline batteries, and may not give much warning before becoming exhausted.

To replace batteries

Warning: Do not switch the instrument on with the battery cover removed.

1. Switch off the instrument and disconnect (the instrument) from any electrical circuits.
2. The rear cover **must not** be opened if the test leads are connected.
3. To remove the rear cover release the screw at the bottom of the cover and lift the cover upwards.
4. Refit new batteries observing the correct polarity as marked on the battery compartment.
5. Replace the cover.

NOTE: Battery cells should not be left in an instrument, which may remain unused for extended periods.

Auto power-down

To extend battery life the instrument will automatically switch off 6 minutes after the last operation.

The instrument can be switch off manually be selecting [OFF] on the rotary switch, or switched back on by pressing the [TEST] button.

Fuse Blown indication

The fuse blown symbol indicates that an internal fuse has failed. This instrument is fitted with a factory fitted fuse and should only be replaced by an authorised Megger repairer.

Contact your Megger distributor
or call Megger Limited on 01304 502 102.

Messages for information and warnings

RCD test types

AC	AC type
AC.S	AC selective RCD
DC	DC type RCD
DC.S	DC selective RCD

Warnings

trp	Unexpected disconnection
hot	Overheated instrument
chk	Check test lead connections
noS	Noise
>50V	Touch voltage exceeded (for 50V settings)
>25V	Touch voltage exceeded (for 25V setting)
<***V	Insufficient supply voltage for test

Other messages

L + L	Will test with L/N swapped
L + N	Will NOT test with L/N swapped
SEt	Setup menu
OFF	Instrumnet is about to switch off

Clean only with a damp cloth. Do not use any alcohol based cleaning fluids as they may leave a residue.

SPECIFICATION

RCD Test Ranges (to EN61557-6)

Supply

RCDT310 100 V - 280 V 45Hz to 65 Hz

RCDT320 50 V - 280 V 45Hz to 65 Hz

RCDT330 50 V - 280 V 45 Hz to 65 Hz

Minimum voltage 71 V for 300 mA RCDs, 100 V for 500 mA RCDs and 205 V for 1000 mA RCDs

Ranges

RCDT310 30 mA, 100 mA, 300 mA, 500 mA

RCDT320/330 10 mA, 30 mA, 100 mA, 300 mA, 500 mA, 1000 mA

Test current accuracy:

No trip test: (1/2I) –8% to –2%
Trip test: (I, 5I) +2% to +8%
Trip time: ±1% ±1ms

Ramp test

Test current range:

1/2 RCD rated current to a nominal 110% Rated current

Step duration: 200 ms

Programmable RCD

RCDT330 only 10 mA to 1000 mA

Voltage measurement (All Models)

Range ac: 0 V - 500 V 25Hz to 450Hz
Accuracy: ±2% ±2 digits

Frequency measurement

(RCDT320 and RCDT330 only)

Range: 25Hz to 450Hz
Accuracy: 25.0Hz to 199.9Hz ±0.1Hz
200Hz to 450Hz ±1Hz

Fault (touch) voltage (25 V or 50 V)

Displayed range: 0 V to 50 V (displayed on the analogue bar graph)

Error: +5%/+15% ±0.5 V

Temperature and humidity

Operating range: -5°C to +40°C

Operating humidity: 93% R.H. at +40°C max.

Storage range: -25°C to +70°C

Maximum altitude: 2000m

Environmental protection: Weather proof to IP54

Safety

Meets the requirements of IEC61010-1 Cat III 300 V phase to earth.

IEC61557

Complies with the following parts of EN61557, Electrical safety in low voltage systems up to 1000 V a.c. and 1500 V d.c. - Equipment for testing, measuring or monitoring of protective measures:

Part1 - General Requirements

Part4 - Residual current devices

Power supply

Batteries: 8 x 1,5 V cells IEC LR6 type (AA alkaline).

Rechargeable: 8 x 1.2 V NiCd or NiMH cells may be used.

Battery condition is constantly shown on the display as a four-section bar graph.

Battery Life: 2000 consecutive tests

Weight

All units 980gms

Dimensions

All units 203 x 148 x 78 mm

E.M.C

In accordance with IEC61326-1

Operational inaccuracies: Ref to www.megger.com

Basic and service errors Loop test ranges

Basic and service errors for RCD test ranges ranges.

The basic error is the maximum inaccuracy of the instrument under ideal conditions, whereas the service error is the maximum inaccuracy taking into effect of battery voltage, temperature, interference, and system voltage and frequency, where applicable.

ACCESSORIES

Item	Order Code
2 wire test lead set and crocodile clips	6220-784
Mains plug test lead (BS 1363)	6220-740
Mains plug test lead CEE 7/7	6220-741
Mains plug test lead (AS/NZS 3112)	6220-790
USB download lead	25970-041
Download Manager CD	6111-442

Megger Certification Software

Powersuite Pro-Lite 16th

The instrument contains static sensitive devices, and care must be taken in handling the printed circuit board. If an instrument's protection has been impaired it should not be used, but sent for repair by suitably trained and qualified personnel. The protection is likely to be impaired if for example; it shows visible damage; fails to perform the intended measurements; has been subjected to prolonged storage under unfavourable conditions, or has been subjected to severe transport stresses.

NEW INSTRUMENTS ARE GUARANTEED FOR 3 YEARS FROM THE DATE OF PURCHASE BY THE USER.

Note: Any unauthorized prior repair or adjustment will automatically invalidate the Warranty.

INSTRUMENT REPAIR AND SPARE PARTS

For service requirements for Megger Instruments **contact**:

Megger Limited	or	Megger
Archcliffe Road		Valley Forge Corporate Centre
Dover		2621 Van Buren Avenue
Kent CT17 9EN		Norristown PA 19403
England.		U.S.A.
Tel: +44 (0) 1304 502 243		Tel: +1 610 676 8579
Fax: +44 (0) 1304 207 342		Fax: +1 610 676 8625

or an approved repair company.

Returning and Instrument for Repair

If it necessary to return an instrument for repair, a Returns Authorisation Number must first be obtained by contacting one of the addresses shown. You will be asked to provide key information, such as the instrument serial number and fault reported when the number is issued. This will enable the Service Department to prepare in advance for the receipt of your instrument, and to provide the best possible service to you.

The Returns Authorisation Number should be clearly marked on the outside of the product packaging, and on any related correspondence. The instrument should be sent, freight paid to the appropriate address. If appropriate a copy of the original purchase invoice and of the packing note, should be sent simultaneously by airmail to expedite clearance through customs.

For instruments requiring repair outside the warranty period a repair estimate will be submitted to the sender, if required, before work on the instrument commences.

Approved Repair Companies

A number of independent instrument repair companies have been authorised for repair work on most Megger instruments, using genuine Megger spare parts. A list of approved companies is available from the UK address shown on this page. Spare parts are also available.

Megger

Megger Limited
Archcliffe Road, Dover
Kent CT17 9EN England
T +44 (0)1 304 502101
F +44 (0)1 304 207342
E uksales@megger.com

Megger
4271 Bronze Way, Dallas,
Texas 75237-1019 USA
T +1 800 723 2861 (USA ONLY)
T +1 214 333 3201
F +1 214 331 7399
E ussales@megger.com

Megger
Z.A. Du Buisson de la Couldre
23 rue Eugène Henaff
78190 TRAPPES France
T +33 (0)1 30.16.08.90
F +33 (0)1 34.61.23.77
E infos@megger.com

Megger Pty Limited
Unit 26 9 Hudson Avenue
Castle Hill
Sydney NSW 2125 Australia
T +61 (0)2 9659 2005
F +61 (0)2 9659 2201
E ausales@megger.com

Megger Limited
110 Milner Avenue Unit 1
Scarborough Ontario M1S 3R2
Canada
T +1 416 298 9688 (Canada only)
T +1 416 298 6770
F +1 416 298 0848
E casales@megger.com

Megger products are distributed in 146 countries worldwide.

This instrument is manufactured in the United Kingdom.
The company reserves the right to change the specification or design without prior notice.

Megger is a registered trademark

Part No. RCDT300_UG_en_V07 Printed in England 0909
www.megger.com