PP7523

Pressure switch with ceramic measuring cell

PP-060-SBG14-QFPKG/US/ /V

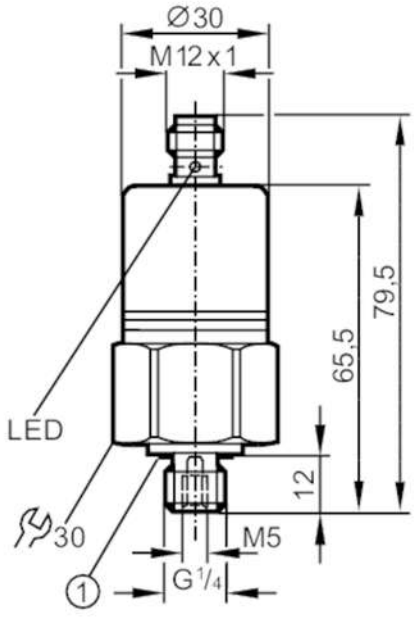

1 Sealing

Product characteristics				
Number of inputs and outputs		Number of digital outputs: 2		
Measuring range		0...60 bar	0...871 psi	0...6 MPa
Process connection		threaded connection G 1/4 external thread internal thread:M5		
Application				
Application		for industrial applications		
Media		liquids and gases		
Medium temperature	[°C]	-25...90		
Min. bursting pressure		500 bar	7200 psi	50 MPa
Pressure rating		200 bar	3000 psi	20 MPa
Type of pressure		relative pressure		
Electrical data				
Operating voltage	[V]	9.6...36 DC; (communication mode: 18...32)		
Current consumption	[mA]	< 45		
Min. insulation resistance	[MΩ]	100; (500 V DC)		
Protection class		III		
Reverse polarity protection		yes		
Power-on delay time	[s]	0.3		
Inputs / outputs				
Number of inputs and outputs		Number of digital outputs: 2		
Outputs				
Total number of outputs		2		
Output signal		switching signal; (configurable)		
Electrical design		PNP		

PP7523

Pressure switch with ceramic measuring cell

PP-060-SBG14-QFPKG/US/ /V

Number of digital outputs		2		
Output function		normally open / normally closed; (parameterisable)		
Max. voltage drop switching output DC	[V]	2		
Permanent current rating of switching output DC	[mA]	250		
Switching frequency DC	[Hz]	170		
Short-circuit protection		yes		
Type of short-circuit protection		pulsed		
Overload protection		yes		
Measuring/setting range				
Measuring range		0...60 bar	0...871 psi	0...6 MPa
Set point SP		1...60 bar	15...871 psi	0.1...6 MPa
Reset point rP		0.7...59.7 bar	11...866 psi	0.07...5.97 MPa
In steps of		0.1 bar	1 psi	0.01 MPa
Factory setting			SP1 = 15 bar	rP1 = 13.8 bar
			SP2 = 45 bar	rP2 = 43.8 bar
			OUT1 = Hno	OUT2 = Hno
Accuracy / deviations				
Switch point accuracy	[% of the span]	< ± 0,8		
Repeatability	[% of the span]	< ± 0,1; (with temperature fluctuations < 10 K)		
Characteristics deviation	[% of the span]	< ± 0,4 (BFSL) / < ± 0,8 (LS); (BFSL = Best Fit Straight Line; LS = limit value setting)		
Hysteresis deviation	[% of the span]	< ± 0,1		
Long-term stability	[% of the span]	< ± 0,1; (per year)		
Temperature coefficient zero point	[% of the span / 10 K]	< ± 0,2; (0...80 °C)		
Temperature coefficient span	[% of the span / 10 K]	< ± 0,2; (0...80 °C)		
Response times				
Response time	[ms]	< 3		
Damping process value dAP in steps	[s]	0,003 - 0,006 - 0,010 - 0,017 - 0,060 - 0,125 - 0,250 - 0,500		
Operating conditions				
Ambient temperature	[°C]	-25...85		
Storage temperature	[°C]	-40...100		
Protection		IP 69K; IP 68; (7 days / 1 m water depth / 0.1 bar)		

PP7523

Pressure switch with ceramic measuring cell

PP-060-SBG14-QFPKG/US/ /V

Tests / approvals			
EMC		immunity	EN 61000-6-2
		EN 61000-4-2 ESD	4 kV contact discharge / 15 kV air discharge
		EN 61000-4-3 HF radiated	20 V/m
		EN 61000-4-4 Burst	4 kV coupling clamp
		EN 61000-4-5 Surge	0,5 kV supply / 1 kV signal for DC units
		EN 61000-4-6 HF conducted	10 V
		immunity	according to the automotive directive 1995/54/EC / 04/104EG / 05/83/EG
		absorber chamber test to ISO 11452-2:	80 V/m
		EN 50155	Klasse T3, C1, S1
Shock resistance		DIN IEC 60068-2-27 / DIN IEC 60068-2-29	1000 g
		DIN EN 61373	category 3
Vibration resistance		DIN IEC 68-2-6	20 g (10...2000 Hz)
		DIN EN 60068-2-64	14 g
		DIN EN 61373	category 2
MTTF	[years]	308	
UL approval		File number UL	E174189
Pressure Equipment Directive		Sound engineering practice; can be used for group 2 fluids; group 1 fluids on request	
Mechanical data			
Weight	[g]	211.1	
Housing		cylindrical	
Dimensions	[mm]	Ø 30 / L = 79.5	
Materials		stainless steel (304/1.4301); FKM; EPDM/X; PA	
Materials (wetted parts)		stainless steel (303/1.4305); ceramics; FKM	
Min. pressure cycles		100 million	
Process connection		threaded connection G 1/4 external thread internal thread:M5	
Restrictor element integrated		no (can be retrofitted)	
Displays / operating elements			
Display		operation	2 x LED, green
		switching status	2 x LED, yellow
Teach function		yes	
Remarks			
Pack quantity		1 pcs.	

Electrical connection

Connector: 1 x M12; coding: A

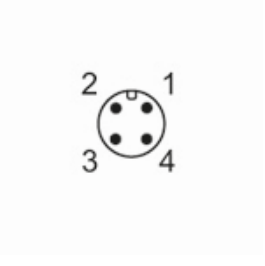

PP7523

Pressure switch with ceramic measuring cell

PP-060-SBG14-QFPKG/US/ /V

Connection

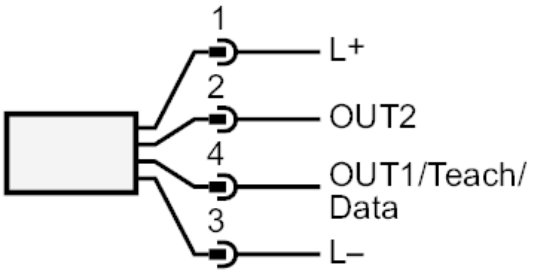

OUT1	switching output
OUT2	switching output
	Diagnostic output