TECHNICAL DATASHEET

Incremental Encoder RI 32



- Replacement for type Typ RIS and RI 31
- The economical encoder for small appliances
- High efficiency by means of ball bearing
- Small torque
- Applications: laboratory equipment, training equipment, crimping machines, tampon printing machines, miniature grinding machines

NUMBER OF PULSES

5 / 10 / 20 / 25 / 30 / 50 / 60 / 100 / 120 / 128 / 200 / 250 / 256 / 288 / 300 / 360 / 400 / 500 / 512 / 600 / 720 / 900 / 1000 / 1024 / 1250 / 1500
Other number of pulses on request

TECHNICAL DATA
mechanical

Housing diameter	30 mm
Shaft diameter	5 mm / 6 mm (Solid shaft)
Flange (Mounting of housing)	Pilot flange
Protection class shaft input (EN 60529)	IP40
Protection class housing (EN 60529)	IP50
Shaft load axial / radial	5 N / 10 N
Max. speed	max. 6000 rpm
Torque	≤ 0.05 Ncm
Vibration resistance (DIN EN 60068-2-6)	100 m/s² (10 ... 2000 Hz)
Shock resistance (DIN EN 60068-2-27)	1000 m/s² (6 ms)
Operating temperature	-10 °C ... +60 °C
Storage temperature	-25 °C ... +85 °C
Material shaft	Aluminum
Material housing	Plastic
Weight	approx. 50 g
Connection	Cable, axial or radial

TECHNICAL DATA
electrical

General design	as per DIN VDE 0160, protection class III, contamination level 2, overvoltage class II
Supply voltage [1]	Push-pull (D): DC 5 V ±10 % Push-pull (K): ± 10% DC 5 V or DC 10 - 30 V
Max. current w/o load	40 mA (DC 5 V), 60 mA (DC 10 V), 30 mA (DC 24 V)
Max. pulse frequency	DC 5 V: 300 kHz DC 10 - 30 V: 200 kHz
Standard output versions [2]	Push-pull (K): A, B, N, $\overline{\text{Alarm}}$ Push-pull 5V, ± 30 mA (D): A, B, N, $\overline{\text{Alarm}}$
Pulse width error	± max. 25° electrical
Number of pulses	5 ... 1500
Alarm output	NPN-O.C., max. 5 mA
Pulse shape	Square wave

TECHNICAL DATASHEET

Incremental Encoder RI 32

TECHNICAL DATA
electrical (continued)

Pulse duty factor	1:1

[1] With push-pull (K): pole protection
[2] Output code "K": short-circuit-proof

ELECTRICAL CONNECTIONS
Cable

Description (push-pull)	Lead ∅ mm [2]	Colour
DC 5 V/ 10 - 30 V	0.5	red
Channel A	0.14	white
Channel B	0.14	green
Channel N	0.14	yellow
GND	0.5	black
$\overline{\text{Alarm}}$	0.14	yellow/black

DIMENSIONED DRAWINGS

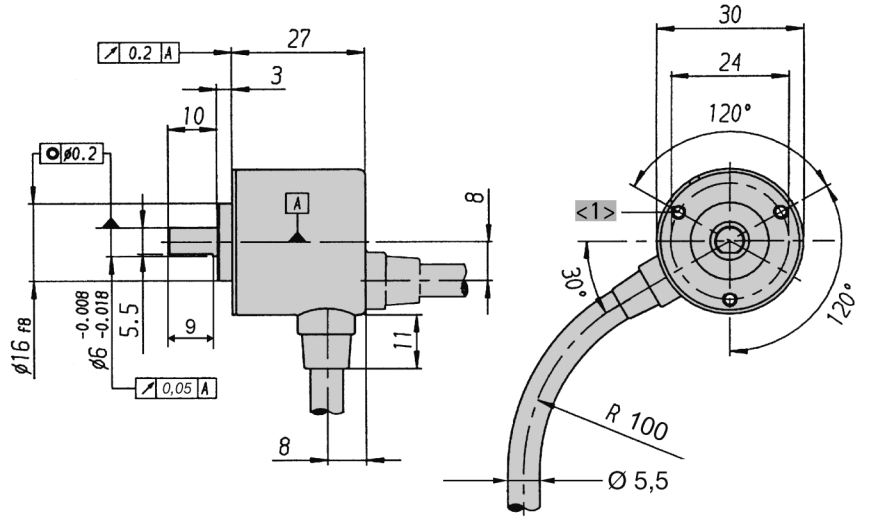

<1> mounting thread M3x4
Cable bending radius R for flexible installation ≥ 100 mm
Cable bending radius R for fixed installation ≥ 40 mm
Dimensions in mm

ORDERING INFORMATION

Type	Number of pulses	Supply voltage [1]	Flange, Protection, Shaft [2,3]	Output [4,5]	Connection
☐	☐	☐	☐	☐	☐
RI32	**5 ... 1500**	**A** DC 5 V **E** DC 10 - 30 V	**R.14** Pilot, IP40, 5 mm **R.11** Pilot, IP40, 6 mm	**K** Push-pull **D** Push-pull 5V, ± 30 mA	**A** Cable, axial **B** Cable, radial

[1] DC 10 - 30 V: only with output "K" available
[2] R.11: flattened, see dimensional drawing
[3] R.14: not flattened
[4] Output code "K": ±10 mA at DC 5 V, ±30 mA at DC 10 - 30 V
[5] Output code "K": short-circuit-proof

TECHNICAL DATASHEET

Incremental Encoder RI 32

ORDERING INFORMATION
Selection of cable length

Versions with cable outlet (connection A, B, E or F) are available with various lengths of cable. To order your desired cable length, please add the respective code to the end of your ordering code. Further cable lengths on request.

Code	Cable length
without code	1.5 m
-D0	3 m
-F0	5 m
-K0	10 m
-P0	15 m
-U0	20 m
-V0	25 m

TECHNICAL DATASHEET

Incremental Encoder RI 32
Accessories

FLEXIBLE COUPLINGS



Plastic coupling

		Ordering code
Plastic coupling	5 mm / 6 mm	3 520 033
Plastic coupling	6 mm / 6 mm	1 761 026
Plastic coupling	5 mm / 5 mm	3 520 034

MEASURING WHEELS

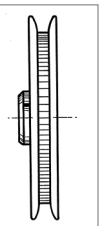

Tread 1

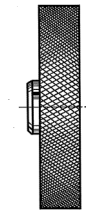

Tread 2 + 3

Tread 1
with rim and fine crosshatched knurl
Applications such as threads and yarns

Tread 2 B
with glued-on rubber profile B = low-wear rubber surface with good grip (white)
Applications such as paper and cardboard, measuring cables, nongreasy metals, fleece, undressed or surface-treated wood, soft and hard plastics

Material	Bore diameter (mm) fitting to encoder shaft	Circumference	Tread	Width of bearing surface	Ordering code
Aluminum	6 mm	0.2 m	1	4 mm	0 601 015
Aluminum	6 mm	0.2 m	2 B	12 mm	0 601 048