ENGLISH

Datasheet

RS Pro Glass Cartridge Fuse, 2.5A, Fuse Speed T, 5 x 20mm

RS Stock No: 169-9429



Description

- Time-delay, low breaking capacity
- Optional axial leads available
- 5 x 20mm physical size
- Glass tube, nickel-plated brass endcap construction
- Designed to IEC 60127-2/3 (32mA-10A) & extensions:12.5A-15A

S506 Electrical Characteristics							
I_n	2.1 I_n max	2.75 I_n min	2.75 I_n max	4 I_n min	4 I_n max	10 I_n min	10 I_n max
32mA-100mA	2 min	200 ms	10 sec	40 ms	3 sec	10 ms	300 ms
125mA-6.3A	2 min	600 ms	10 sec	150 ms	3 sec	20 ms	300 ms
8A-15A	2 min	600 ms	10 sec	150 ms	3 sec	20 ms	300 ms

Agency Information

- UL Recognized Card: Guide JDYX2, File E19180
- CSA Component Acceptance: File 1803366
- cURus Recognition: Guide JDYX8, File E19180
- SEMKO Approval: File 507078, 415434, 806492
- VDE Approval: File 40011926
- BSI Approval: File KM55676
- IMQ Approval: File E1921, CA03.00530
- PSE/JET: File JET1641-31003-1005, JET1641-31003-1006
- CCC Approval: File 2005010207155693, 2002010207011294

Dimensions - mm

Drawing Not to Scale

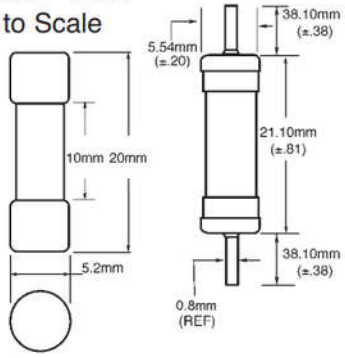

- Ratings above 4A have a 0.81mm diameter lead

Nominal Time-Current Characterisitics of S506-R

