BC10-QF5.5-AP6X2
Capacitive Sensor

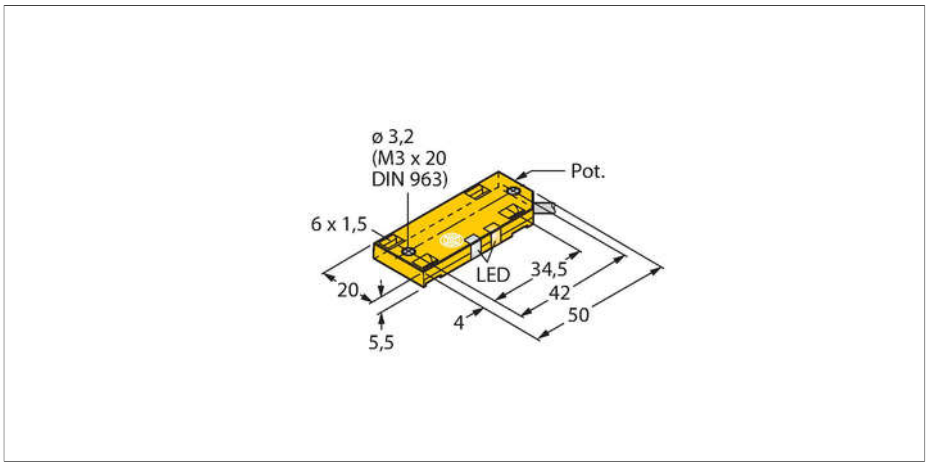

Features

- Rectangular, height 5.5 mm
- Active face on top
- Plastic, PP
- Fine adjustment via potentiometer
- DC 3-wire, 10…30 VDC
- NO contact, PNP output
- Cable connection

Wiring diagram

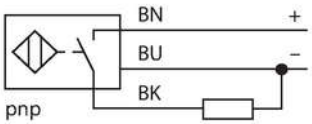

Functional principle

Capacitive proximity switches are designed for non-contact and wear-free detection of electrically conductive as well as non-conductive metal objects.

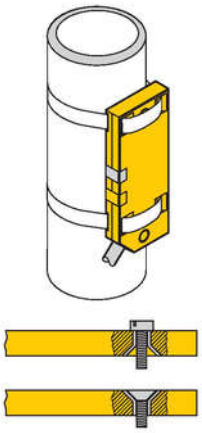

Technical data

Type	BC10-QF5.5-AP6X2
Ident. no.	2620117
Rated switching distance (flush)	10 mm
Rated switching distance (non-flush)	10 mm
Secured operating distance	≤ (0.72 x Sn)
Hysteresis	2…20 %
Temperature drift	type 20 %
Repeat accuracy	≤ 2 % of full scale
Ambient temperature	-25…+70 °C
Electrical data	
Operating voltage	10…30 VDC
Residual ripple	≤ 10 % U_{ss}
DC rated operational current	≤ 200 mA
No-load current	≤ 15 mA
Residual current	≤ 0.1 mA
Switching frequency	0.1 kHz
Isolation test voltage	≤ 0.5 kV
Output function	3-wire, NO contact, PNP
Short-circuit protection	yes / Cyclic
Voltage drop at I_e	≤ 1.8 V
Wire breakage/Reverse polarity protection	yes / Complete
Approvals	UL
Mechanical data	
Design	Rectangular, QF5,5
Dimensions	54 x 20.3 x 5.5 mm
Housing material	Plastic, PP

BC10-QF5.5-AP6X2| 13-02-2020 14-45 | Technical modifications reserved

Technical data

Active area material	Plastic, PP
Electrical connection	Cable
Cable quality	Ø 3 mm, Lif9Y-11Y, PUR, 2 m
Core cross-section	3 x 0.14 mm²
Vibration resistance	55 Hz (1 mm)
Shock resistance	30 g (11 ms)
Protection class	IP67
MTTF	1080 years acc. to SN 29500 (Ed. 99) 40 °C
Power-on indication	LED,Green
Switching state	LED, Yellow

Mounting instructions

Product features

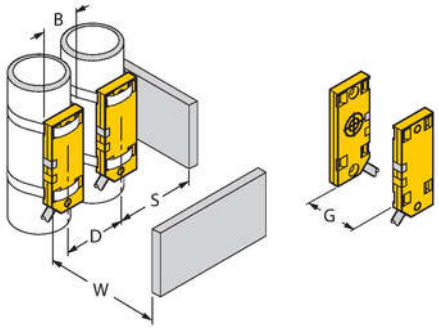

Distance D	40 mm
Distance W	30 mm
Distance S	30 mm
Distance G	60 mm
Diameter active area B	Ø 20 mm

The given minimum distances have been checked against the standard switching distance. Should the sensitivity of the sensors be changed via potentiometer, the data sheet specifications no longer apply.

BC10-QF5.5-AP6X2| 13-02-2020 14-45 | Technical modifications reserved