NJ 202 ECP

Popular item

Dimensions

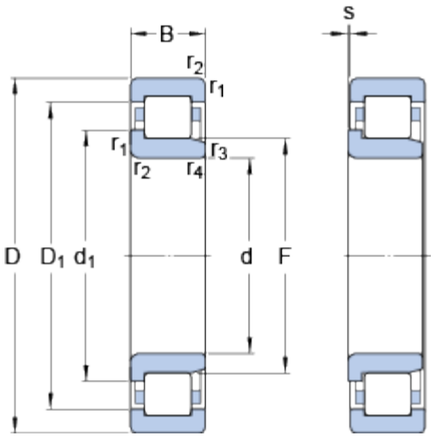

d		15	mm
D		35	mm
B		11	mm
d_1	≈	21.9	mm
D_1	≈	27.7	mm
F		19.3	mm
$r_{1,2}$	min.	0.6	mm
$r_{3,4}$	min.	0.3	mm
s	max.	1	mm

Abutment dimensions

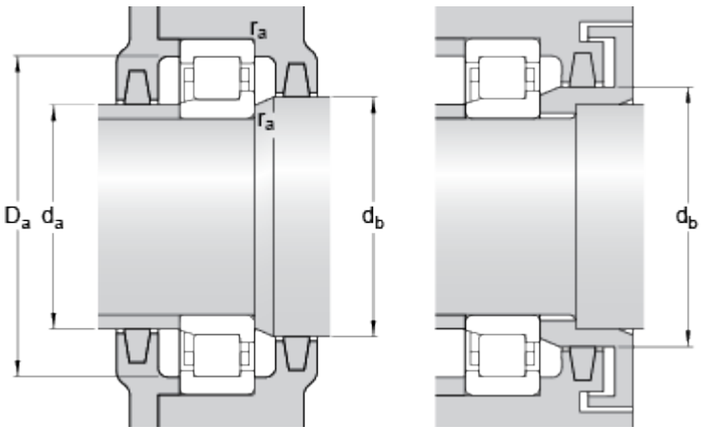

d_a	min.	18.2	mm
d_a	max.	18.4	mm
d_b	min.	23	mm
D_a	max.	31.3	mm
r_a	max.	0.6	mm

Calculation data

Basic dynamic load rating	C	12.5	kN
Basic static load rating	C_0	10.2	kN
Fatigue load limit	P_u	1.22	kN
Reference speed		22000	r/min
Limiting speed		26000	r/min
Calculation factor	k_r	0.15	
Limiting value	e	0.2	
Axial load factor	Y	0.6	

Mass

Mass bearing	0.048	kg