E70442

Cable clip for fixing the AS-Interface flat cable

AS-i clip 50 pcs.

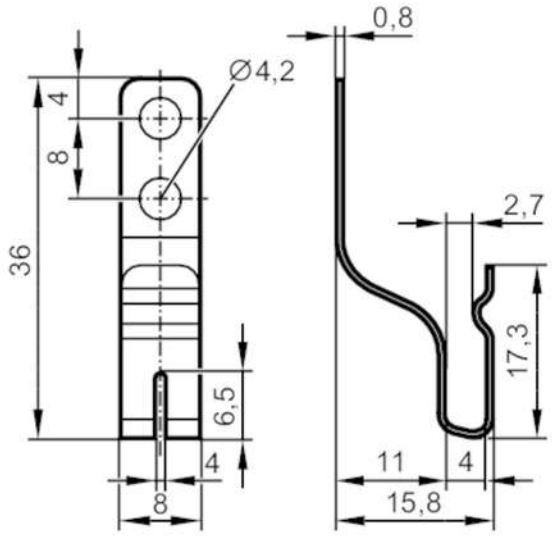

Application		
Installation		via M4 screw or welding
Mechanical data		
Weight	[g]	122.3
Materials		stainless steel (301/1.4310)
Remarks		
Pack quantity		50 pcs.