Pulse counters, electronic

LCD pulse counters | Adding or subtracting (battery) | Codix 130



The Codix 130 is a simple battery powered pulse counter for fast and slow count pulses with 8-digit LCD display, optional backlighting, for NPN, PNP and high voltage applications.

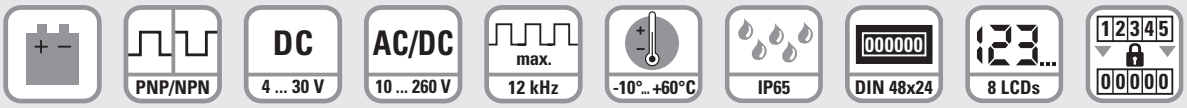

Battery powered | Input type | Pulse voltage | Max. count frequency | Temperature range | High protection level | DIN front bezel | LCD display | Lockable reset

Powerful

- High quality LCD display with 8 mm high figures.
- Count direction adding and subtracting via control input.
- Battery life approx. 8 years.
- Optional display backlighting.
- Filter function for bounce-free counting with mechanical contacts.
- Count frequency max. 12 kHz.
- High protection level IP65.

Simple

- Screw terminals, RM 5 mm.
- Reset key can be enabled via “Reset Enable“ input.
- For positive and negative counting edges, depending on version.
- High voltage version for 10 ... 260 V AC/DC voltage pulses.
- Large 8-digit LCD display with 8 mm high figures.

Order code

6.130	.	012	.	8	X (a)	X (b)

(a) *Backlighting*
5 = without [1]
6 = with [1]

(b) *Input type: add/sub [2] – single-channel, adding or subtracting counting*

Input type	*INP A*				*INP B*			
0 [1] = *add/sub* [2]	0 ... 0.7 V DC	count	NPN	7 kHz	0 ... 0.7 V DC	count	NPN	30 Hz
2 [1] = *add/sub* [2]	4 ... 30 V DC	count	PNP	12 kHz	0 ... 0.7 V DC	count	NPN	30 Hz
3 [1] = *add/sub* [2]	10 ... 260 V AC/DC	count	AC/DC	30 Hz	10 ... 260 V AC/DC	reset	AC/DC	–

Delivery specification
- Pulse counter
- Mounting clip
- Front bezel for screw mounting (T008181) 56 x 40 mm [2.20 x 1.57“], panel cut-out 50 x 25 mm [1.97 x 0.98“]
- Front bezel for clip mounting (T008180) 53 x 28 mm [2.09 x 1.10“], panel cut-out 50 x 25 mm [1.97 x 0.98“]
- Gasket
- Instruction manual, multilingual

1) Stock types.
2) Single-channel, adding or subtracting counting.

© Fritz Kübler GmbH, subject to errors and changes. 03/2023

LCD pulse counters | Adding or subtracting (battery) | Codix 130

Accessories / Mounting examples

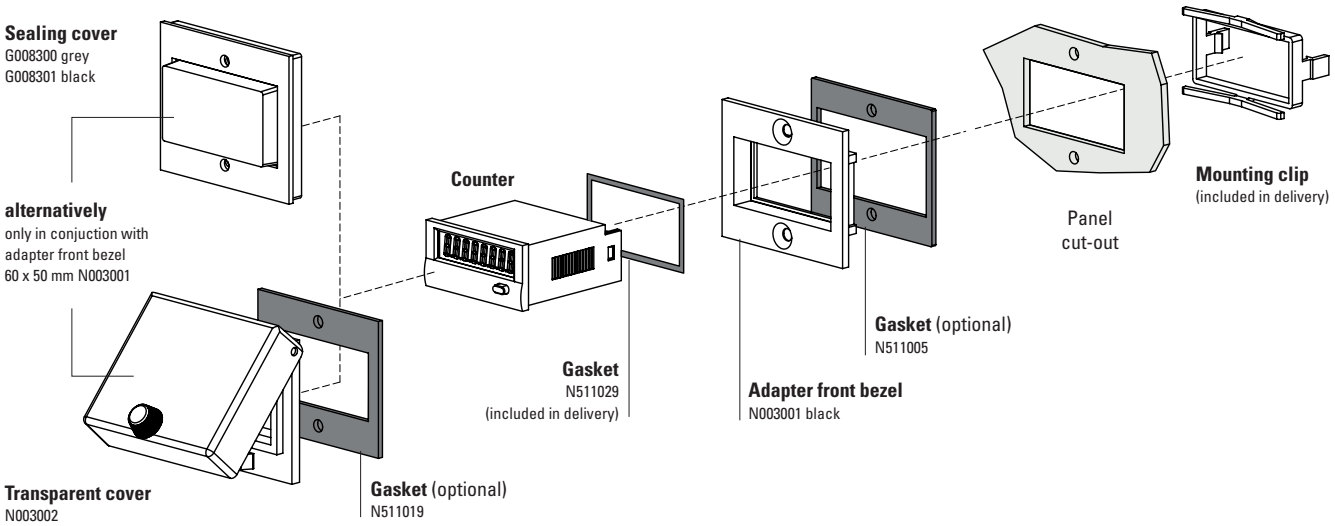

		Type / size	Description		Order no.	suitable gasket
Adapter front bezel		**53 x 28 mm [2.09 x 1.10“]**	for cut-out 50 x 25 mm [1.97 x 0.98“] to cut-out 45 x 22.2 mm [1.77 x 0.94“]	grey black anthracite	**T008164** **T008165** **T008180**	**N511015**
		**56 x 40 mm [2.20 x 1.57“]**	for cut-out 50 x 25 mm [1.97 x 0.98“] to cut-out 45 x 22.2 mm [1.77 x 0.94“] screw mounting	black anthracite	**T008161** **T008181**	**N511045**
		**72 x 36 mm [2.83 x 1.42“]**	for cut-out 68 x 33 mm [2.68 x 1.30“] to cut-out 45 x 22.2 mm [1.77 x 0.94“]	black and silver anodised as set	**162704Set**	–
		**60 x 50 mm [2.36 x 1.97“]**	for cut-out 54 x 29 mm [2.13 x 1.14“] to cut-out 45 x 22.2 mm [1.77 x 0.94“] screw mounting	black	**N003001**	**N511005**
		**48 x 48 mm [1.89 x 1.89“]**	for cut-out 45 x 45 mm [1.77 x 1.77“] to cut-out 45 x 22.2 mm [1.77 x 0.94“]	black	**T008883**	–
Sealing cover IP65		**K1**	only in conjuction with adapter front bezel 60 x 50 mm N003001	transparent / grey transparent / black	**G008300** **G008301**	–
Transparent cover IP65		**1 Dv** (mounted on bezel)	cover lockable, for cut-out 54 x 29 mm [2.13 x 1.14“], only in conjuction with adapter front bezel 60 x 50 mm N003001	transparent / black	**N003002**	**N511019**
Gasket counter			48 x 24 mm (for installation in adapter front bezel) 49 x 25 mm		**N511029** **N511034**	
Mounting frame		**cut-out 50 x 25 mm [1.97 x 0.98“]**	via adapter T008180 for snap-on mounting on 35 mm [1.38“] top-hat DIN rail	chromated	**G300004**	–
Enclosure blind		**48 x 24 mm [1.89 x 0.94“]**	for cut-out 45 x 22.2 mm [1.77 x 0.94“] and cut-out 50 x 25 mm [1.97 x 0.98“]	anthracite	**G003836**	–

incl. in delivery

© Fritz Kübler GmbH, subject to errors and changes. 03/2023

LCD pulse counters | Adding or subtracting (battery) | Codix 130

Technical data

General technical data

Display	LCD, 8 digits, 8 mm [0.32“] high
Backlighting	external electrical source 24 V DC ±20 %, 50 mA
Modes	adding or subtracting (selectable)
Display range	-9999999 ... 99999999, with overflow display
Reset	manual and electrical
Working temperature	-10 °C ... +55 °C [+14 °F ... +131 °F] (non-condensing)
Operating temperature	-10 °C ... +60 °C [+14 °F ... +140 °F] (non-condensing)
Storage temperature	-20 °C ... +70 °C [-4 °F ... +158 °F]
Relative humidity	< 85 % (non-condensing)
Altitude	up to 2000 m [6562‘]

Electrical characteristics

Supply voltage		internal lithium battery approx. 8 years at 20 °C [68 °F]
Device safety	designed to	EN 61010 part 1
	protection class	2
	application area	pollution level 2

Mechanical characteristics

Housing	dark grey RAL 7021
Protection	IP65 (front side)
Weight	approx. 50 g [1.76 oz]

Counting inputs

Counting input of the DC-versions (max. 30 V DC)		
slow counting input		max. 30 Hz NPN
fast counting input		max. 12 kHz (PNP), 7 kHz (NPN)
switching level NPN	LOW	0 ... 0.7 V DC
	HIGH	3 ... 30 V DC
switching level PNP	LOW	0 ... 0.7 V DC
	HIGH	4 ... 30 V DC
Counting input of the high voltage versions (10 ... 260 V DC/V AC)		
optocoupler input		max. 30 Hz
min. pulse time		16 ms
switching level	LOW	0 ... 2 V AC/DC
	HIGH	10 ... 260 V AC/DC
Counting direction switching (only DC-version)		
mode		adding / subtracting
contact input		open collector NPN (switching at 0 V)
switching level NPN	LOW	0 ... 0.7 V DC
	HIGH	3 ... 5 V DC
Reset input (only DC and high voltage)		
minimum pulse time	DC	50 ms
	high voltage	16 ms
contact input DC – NPN	LOW	0 ... 0.7 V DC
	HIGH	3 ... 30 V DC
high voltage input		10 ... 260 V AC/DC
Electrical reset key locking (for DC and high voltage)		
contact input		open collector NPN (switching at 0 V)
switching level NPN	LOW	0 ... 0.7 V DC
	HIGH	3 ... 5 V DC

Approvals

UL compliant in accordance with	File no. E128604
CE compliant in accordance with	
EMC Directive	2014/30/EU
RoHS Directive	2011/65/EU
Low Voltage Directive	2014/35/EU
UKCA compliant in accordance with	
EMC Regulations	S.I. 2016/1091
RoHS Regulations	S.I. 2012/3032
Low Voltage Regulations	S.I. 2016/1101

Terminal assignment

DC type: 6.130.012.8x0

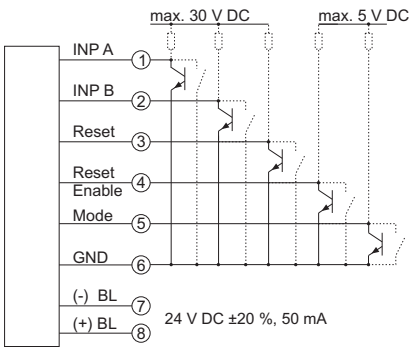

DC type: 6.130.012.8x2

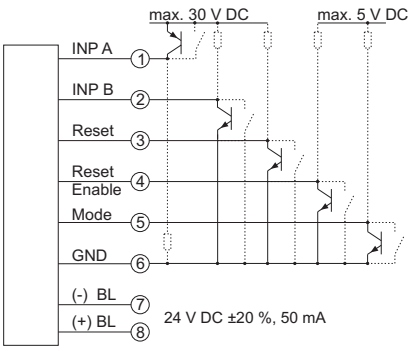

AC type: 6.130.012.8x3

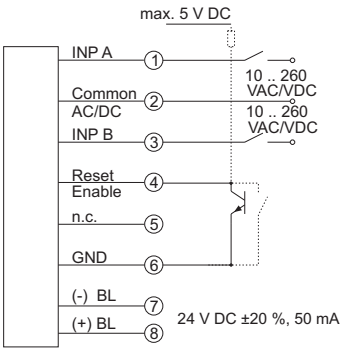

BL = backlighting

© Fritz Kübler GmbH, subject to errors and changes. 03/2023

LCD pulse counters | **Adding or subtracting (battery)** | **Codix 130**

Dimensions

Dimensions in mm [inch]

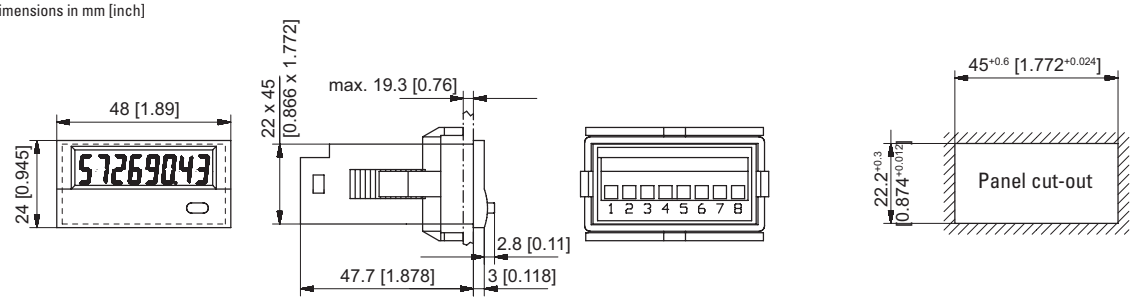

Front bezel for clip mounting (included in delivery)

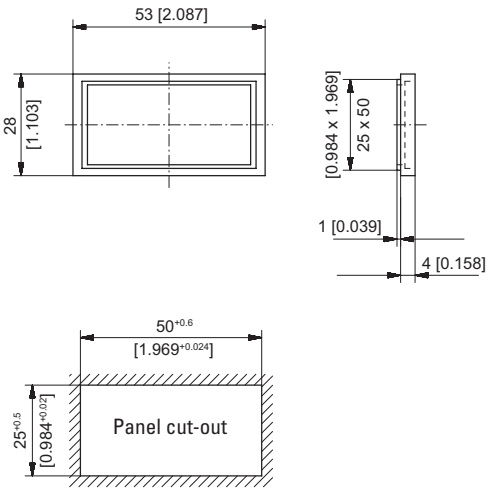

Front bezel for screw mounting (included in delivery)

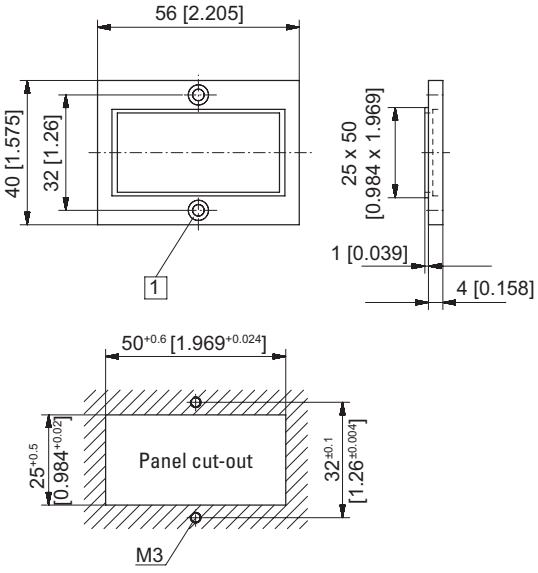

1 Countersinking Af3, DIN 74

© Fritz Kübler GmbH, subject to errors and changes. 03/2023