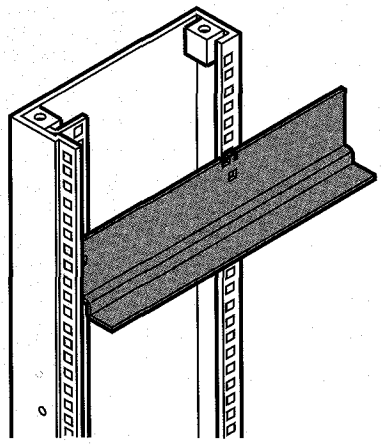

VNT012

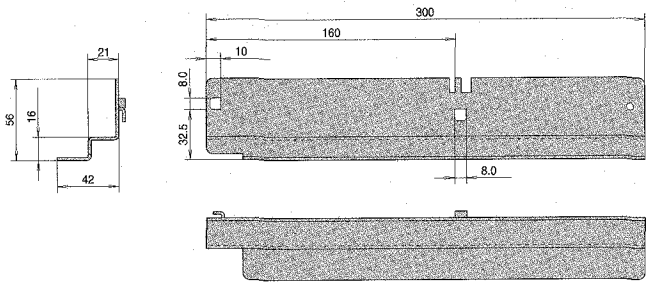

DTA44090

Ordering slide rail

For safe and easy assembly of heavy 19" equipment.

Delivery comprises

Qty	Description	Material	Finish
1 kit	Slide rail	St 2 mm	white zinc-plated

Load-carrying capacity

max. 40 kg per pair (stationary)

Slide rail kit	Order No.
1 pair	**20119-080**
5 pairs	**20119-106**

Note

Panel mounts are required in order to mount slide rails.

Ordering assembly parts for 19″ mounting

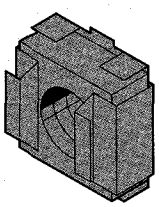

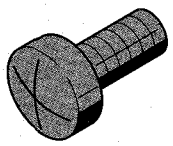



AZA43236 AZA43237 AZA43666

Delivery comprises

Item	Qty	Description	Material	Finish
1	1 kit	*Cage nut M 6*	St	Zn-plated
2	1 kit	Panhead pozidrive screw M 6 x 16, DIN 7985	St	bright chrome (Acrolyte process)
3	1 kit	Washer for M 6	plastic	black

Application

Mounting for 19" equipment to 19" pitch holes.

Item	Description	1 kit	Order No.
1	Cage nut M 6	50 pcs	**21100-003**
		100 pcs	**21100-004**
2	Panhead screw M 6 x 16	50 pcs	**21100-021**
		100 pcs	**21100-022**
3	Washer M 6	50 pcs	**21100-015**
		100 pcs	**21100-016**
1 - 3	Cage nut M 6 Panhead screw M 6 x 16 Washer M 6	8 pcs each	**21100-435**